VADER – ENCHANTED VALLEY WATER SYSTEM PLAN

JULY 2016

Lewis County Public Works
2025 NE Kresky Ave.
Chehalis, WA 98532

BOARD OF COUNTY COMMISSIONERS

Edna J. Fund, District No. 1
P.W. Schulte, District No. 2
Gary Stamper, District No. 3

CERTIFICATE OF ENGINEER

Lewis County
Vader-Enchanted Valley Water System
Water System Plan

The material and data contained in this report were prepared under the direction and supervision of the undersigned, whose seal as a professional engineer, licensed to practice in the State of Washington, is affixed below.

TIMOTHY R. ELSEA
STATE OF WASHINGTON
47195
REGISTERED
PROFESSIONAL ENGINEER

7/25/16

Tim R. Elsea, PE
County Engineer
Lewis County, WA

Shirley Y. Kook, PE
Project Manager
Lewis County, WA
Shirley Kook authored most of this document prior to her departure from Lewis County Public Works. Her dedication and attention to detail are evident throughout this document.

Table of Contents

LIST OF TABLES 9
LIST OF TABLES (continued) 10
LIST OF FIGURES 11
LIST OF APPENDICES 12
ABBREVIATIONS AND ACRONYMS 13
CERTIFICATE OF ENGINEER 2
1. INTRODUCTION 15
1.1 OBJECTIVES 15
1.2 OWNERSHIP AND MANAGEMENT 15
1.3 RETAIL SERVICE AREA 16
1.4 POLICIES 16
1.4.1 Duty to Serve 17
1.5 RELATED PLANS AND REFERENCES 17
1.6 REVIEWS AND RESPONSES 17
2. DESCRIPTION 19
2.1 NATURAL FEATURES 19
2.1.1 Geography 19
2.1.2 Climate and Precipitation 19
2.1.3 Soils and Geology 20
2.2 HISTORY OF THE SYSTEM 20
2.3 SYSTEM FACILITIES 23
2.3.1 Supply Source 24
2.3.2 Intake Facilities 24
2.3.3 Water Treatment Plant 25
2.3.4 Storage 26
2.3.5 Distribution System 26
2.3.6 Service Meters 27
2.3.7 Pressure Zones 27
3. PLANNING DATA AND DEMAND 29
3.1 GROWTH MANAGEMENT ACT 29
3.2 SERVICE AREA 29
3.3 LAND USE AND ZONING 29
3.4 POPULATION 30

3.4.1 Historical Population 30
3.4.2 Projected Population 32
3.5 WATER USE CHARACTERISTICS 33
3.5.1 Production and Peaking Factor 33
3.5.2 Customer Categories, Connections and Consumption 34
3.5.3 Water Balance and Leakage 35
3.5.4 Water Use Factors and Equivalent Residential Units (ERU) 38
3.6 WATER DEMAND FORECAST 39
3.6.1 Demand Forecast Methodology 39
3.6.2 Water Demand Projections 41
4. SYSTEM ANALYSIS 43
4.1 WATER RIGHTS ANALYSIS 43
4.2 SOURCE CAPACITY 47
Limiting Factor Determination Source Capacity Average Daily Demand 47
4.3 STORAGE CAPACITY 47
Existing Effective Storage 47
Equalizing Storage 48
Standby Storage 49
Fire Suppression Storage 49
Storage Capacity Analysis 50
4.4 DISTRIBUTION SYSTEM ANALYSIS 50
4.4.1 Hydraulic Modeling 50
4.4.2 Demand Allocation 51
4.4.3 Model Calibration 51
4.4.4 Model Scenarios 52
4.4.5 Peak Hour Demand Results 53
4.4.6 Fire Flow Analysis Results 53
4.5 SUMMARY OF SYSTEM CAPACITIES 55
5. WATER USE EFFICIENCY PROGRAM 57
5.1 WATER USE EFFICIENCY PROGRAM 57
5.2 COMPLIANCE WITH WUE REQUIREMENTS 57
5.3 CURRENT CONSERVATION PROGRAM 59
5.4 CONSERVATION PROGRAM FOR 2014 - 2020 60
5.5 WATER LOSS CONTROL ACTION PLAN 60

6. WATER QUALITY 61
6.1 SYSTEM OVERVIEW AND COMPLIANCE RESPONSIBILITY 61
6.2 SAFE DRINKING WATER ACT AND WAC 246-290 61
6.3 REGULATIONS AND COMPLIANCE 62
6.3.1 TREATMENT REGULATION 63
Surface Water Treatment Rules 63
Filter Backwash Recycling Rule 64
6.3.2 FINISHED WATER REGULATIONS 64
Chemical Contaminant Rules 64
Unregulated Contaminant Monitoring Rule 65
Unregulated Contaminant Monitoring Rule 2 65
6.3.3 DISTRIBUTION SYSTEM REGULATIONS 65
Total Coliform Rule 65
Lead and Copper Rule 66
Stage 1 and Stage 2 Disinfectant and Disinfection By-Products Rule 66
6.3.4 NOTIFICATION REGULATIONS 67
Consumer Confidence Report Rule 67
Public Notification Rule 67
6.3.5 Sentry Internet 67
6.4 CUSTOMER INQUIRIES AND COMPLAINTS 67
6.5 LABORATORIES 68
6.6 SUMMARY OF REGULATORY STATUS AND MONITORING REQUIREMENTS 68
7. SOURCE WATER PROTECTION 71
7.1 REGULATORY REQUIREMENTS 71
Source Protection 71
Watershed Control 71
Reliability 71
7.2 WATERSHED CONTROL PROGRAM 72
7.2.1 Watershed Description and Characteristics 72
7.2.2 Identification of Activities and Land Uses Affecting Water Quality 72
7.2.3 Watershed Management and Control Measures 73
7.2.4 Monitoring Program 74
7.2.5 System Operations 74
7.2.6 Future Watershed Protection Efforts 75

8. OPERATION AND MAINTENANCE PROGRAM 77
8.1 MANAGEMENT AND PERSONNEL 77
8.1.1 Organizational Structure 77
8.1.2 Public Works 77
Operations 77
Engineering 78
Administration 78
Fiscal 78
8.2 CERTIFICATION 78
8.3 DAILY OPERATIONS AND PREVENTIVE MAINTENANCE 79
8.3.1 Standard Operating Procedures Manual 79
8.3.2 Supply Source 81
8.3.3 Treatment Plant 81
8.3.4 Storage 81
8.3.5 Distribution System 81
8.3.6 Service Meters 82
8.4 EMERGENCY RESPONSE PROGRAM 82
8.4.1 Contingency Plan 82
Emergency Roster 82
Inventory of Materials 84
General Field Response 84
Severity of Emergencies 84
8.4.2 Vulnerability Assessment 85
Dam Failure 86
Debris Flow 87
Drought 87
Earthquake 87
Extreme Heat 87
Flooding 87
Hailstorm 88
Ice/Snow Storm 88
Severe Windstorm 88
Volcanic Eruption 88
Wildfire 88

Contamination of Water Supply 88
Water Main Break 88
Vandalism 89
8.4.3 Public Notification 89
8.5 CROSS CONNECTION CONTROL PROGRAM 89
8.5.1 Purpose 89
8.5.2 Guidance 90
8.5.3 Program Elements 90
Element 1: Legal Authority 90
Element 2: Hazard Assessment 90
Element 3: Control 91
Element 4: CCS Personnel 91
Element 5: Inspection 91
Element 6: Quality Control Testing Program 91
Element 7: Backflow Incident Response 91
Element 8: Public Education 93
Element 9: Records 93
Element 10: Reclaimed Water Requirements 93
8.6 RECORD KEEPING AND REPORTING 93
8.7 WATER SHORTAGE RESPONSE PLANNING 96
9. DESIGN AND CONSTRUCTION STANDARDS 97
9.1 PROCEDURES 97
9.2 CONSTRUCTION STANDARDS 99
10. IMPROVEMENT PROGRAM 101
10.1 DEVELOPMENT 101
10.2 CAPITAL IMPROVEMENTS 103
ST-1 Reservoir Life Extension 103
ST-2 Additional Reservoir 104
D-1 SR 506 West of Olequa Creek Water Main Replacement 104
D-2 Firgrove Road, Enchanted Valley Drive South and Horseshoe Bend Water Main Replacements 104
D-3 Enchanted Valley Water Main Replacements 104
D-4 8th Street Water Main Replacement 105
D-5 7th Street Water Main Replacement 105
D-6 9th Street and C Street Water Main Replacements 105

D-7 Annonen Road Water Main Replacement 105
D-8 D and E Streets Loop 105
D-9 Customer Shutoff Valves 105
D-10 SR 506 Bridge Deck Pipe Support Replacement 105
D-11 Pressure Reducing Valves 105
Treatment Efficiency Improvements 106
TR-1 Turbidimeters 106
TR-2 Chartless Recorders 106
TR-3 Comprehensive Electrical Survey 106
TR-4 On-line Analyzer 106
TR-5 SCADA System Improvements 106
TR-6 Leak Detection Survey 106
TR-7 Energy Audits 107
11. FINANCIAL PROGRAM 109
11.1 PAST FINANCIAL HISTORY 109
11.2 RATES 110
11.3 DEVELOPMENT OF THE FINANCIAL PLAN 111
Revenues 111
Expenses 111
11.4 FINANCIAL PROJECTIONS 112
11.5 FUNDING SOURCES 112
Capital Facility Charges 112
Community Development Block Grant (CDBG) 113
Drinking Water State Revolving Fund (DWSRF) 113
Public Works Trust Fund (PWTF) 114
Section 319 Grants 114
Revenue Bonds 114
Utility Local Improvement Districts/Special Assessment Districts 115
Developer Contributions 115
Infrastructure Assistance Coordinating Council (IACC) 115
11.6 SUMMARY 115

LIST OF TABLES

No.	Description	Page
1.1	List of Information and References	17
2.1	Raw Water Pump Station Design Criteria	24
2.2	Treatment Plant Design Criteria	25
2.3	Distribution System Pipe Inventory	27
3.1	Land Use Distribution	29
3.2	Historical Population	31
3.3	Customer Population	32
3.4	Projected Population	32
3.5	Annual Water Production	33
3.6	2011 to 2014 Monthly Production	34
3.7	Peaking Factor of Maximum Day to Average Day	34
3.8	Consumption by Customer Classification	34
3.9	Number of Connections	35
3.10	2014 Water Balance	35
3.11	Non-Revenue Water Loss	37
3.12	ERU Analysis	39
3.13	ERU by Customer Classification	39
3.14	Water Demand Forecast	42
4.1	Water Rights Summary	43
4.2	Water Rights Assessment-Existing Water Right Status	44
4.3	Water Rights Assessment-Forecasted 6-Year Water Right Status	45
4.4	Water Rights Assessment-Forecasted 20-Year Water Right Status	46
4.5	18 Hour Source Production Capacity Analysis	47
4.6	Reservoir Characteristics	47
4.7	Projected Storage Capacity Requirements	50
4.8	Hydrant Test Readings	51
4.9	Model Calibration Results	52
4.10	Modeling Scenarios	52
4.11	Available Fire Flows	53
4.12	Water Facility Capacities	55
4.13	Water Demand with No Conservation	55
4.14	Limiting Factor Determination of System Capacity ERU	56
4.15	Current Water System Status (ERU/ADD/MDD/PHD)	56
5.1	Compliance with Water Efficiency Rule Requirements	58
6.1	Applicable Safe Water Drinking Act (SWDA) Regulations	61
6.2	Regulatory Levels and Monitoring Results	68
7.1	WRIA 26 Land Cover	72
8.1	Required Personnel Certifications	79
8.2	Recommended Maintenance Schedule	79
8.3	Emergency Roster	83
8.4	Potential Disaster Effects	86
8.5	Retention of Records	93

LIST OF TABLES (continued)

No.	Description	Page
10.1	Past CIP Projects	101
10.2	CIP Program	103
11.1	Summary of Five-Year Financial History	109
11.2	Monthly Water Rates	111
11.3	Projected Six-Year Financial Plan	113

LIST OF FIGURES

No.	Description	After Page
1.1	Retail Service Area Map	16
2.1	Water System	23
3.1	Service Area Zoning Map and Analysis	29
7.1	Watershed Boundaries	72
7.2	Land Types in Watershed	72
7.3	Land use and Land Cover in WRIA 26	72
10.1	CIP Project Map	102

LIST OF APPENDICES

No.	Description
A	Water Facilities Inventory Form
B	WSP Review and Approval Documents (Consistency Review Approvals, DOH Meeting documentation, draft WSP Comments & Responses, Meeting Notes, Lewis County Resolutions and Approvals
C	Water Rights Certificates
D	Hydraulic Analyses
E	Water Loss Action Plan
F	Coliform Monitoring Plan
G	Stage 2 DBPR Compliance Monitoring Plan
H	Title 13 Lewis County Code and Resolution of Approved Utility Rates and Design and Construction Standards
I	Water Shortage Response Plan
K	CIP Cost Estimates
L	Standard Operating Procedures for Vader-Enchanted Valley Water System
M	Amortization schedules for contract loans

ABBREVIATIONS AND ACRONYMS

AC	Asbestos cement
Administrator	Director of Lewis County Public Works
CCCP	Cross Connection Control Plan
CCR	Consumer Confidence Report
City	City of Vader, WA (an incorporated city)
CMP	Coliform Monitoring Plan
D/DBP Rule	Disinfectants/Disinfection Byproducts Rule
DIP	Ductile Iron Pipe
DOH	Washington State Department of Health
DS	Dead Storage
Ecology	Washington State Department of Ecology
ES	Effective Storage
FBRR	Filter Backwash Recycling Rule
ft	Feet
FW	Finished Water
HOA	Home Owners Association
HUD	U.S. Department of Housing and Urban Development
hp	Horsepower
IESWTR	Interim Enhanced Surface Water Treatment Rule
IOC	Inorganic Compounds
LCC	Lewis County Code
LC Health	Lewis County Health Department
lf	Lineal feet
LT1ESWTR	Long Term 1 Enhanced Surface Water Treatment Rule
LT2ESWTR	Long Term 2 Enhanced Surface Water Treatment Rule
MCL	Maximum Contaminant Levels
MDD	Maximum Daily Demands
OFM	Office of Financial Management
OS	Operational Storage
PHD	Peak Hour Demands

PLC	Programmable Logic Controller
PW	Lewis County Department of Public Works
PWS	Public Water System
QPH	Peak Hourly Demand
QS	Total Source of Supply Capacity
RW	Raw Water
SDWA	Safe Drinking Water Act
sf	Square feet
SOC	Synthetic Organic Compounds
SWTR	Surface Water Treatment Rules
TS	Total Storage
UCMR	Unregulated Contaminant Monitoring Rule
UCMR2	Unregulated Contaminant Monitoring Rule 2
USEPA	U.S. Environmental Protection Agency
Utility	Utility Division, Lewis County Department of Lewis County
VES	Equalizing Storage
VOC	Volatile Organic Compounds
WAC	Washington Administrative Code
WFI	Water Facilities Inventory
WQMR	Water Quality Monitoring Requirements
WSDOT	Washington State Department of Transportation
WSP	Water System Plan

1. INTRODUCTION

This chapter provides general information about the Vader-Enchanted Valley water system which came under Lewis County management in 2011 and ownership in 2014. Information is given about the authority, purposes, service area, history and planning process of this plan.

1.1 OBJECTIVES

This Water System Plan (WSP) is developed to comply with Chapter 246-290-100 of the Washington Administrative Code (WAC) and the following objectives:

- Update the previous WSP issued in 2008 and WSP Amendment in 2010 when the system was owned and managed by the City of Vader.
- Provide information about the Enchanted Valley Country Club water system when it was purchased by the City of Vader in June 2009.
- Give information about the Court appointment of the system from the City of Vader (City) to Lewis County on October 31, 2010.
- Identify present and future needs.
- Demonstrate that the county system has the operational, technical, managerial and financial capability to comply with all relevant local, state and federal plans and regulations.

1.2 OWNERSHIP AND MANAGEMENT

This WSP is developed for the Vader-Enchanted Valley public water system owned and managed by Lewis County Department of Public Works. The Vader-Enchanted Valley water system is a Group A community water system known as PWS #90900E and approved in 2010 for 369 connections by DOH. A summary of the system is provided in the utility's Water Facilities Inventory (WFI) included in Appendix A.

Superior Court awarded the system to Lewis County on October 29, 2010 with the plan to have transitional operation and management by Lewis County immediately, full operation and management by Lewis County on January 1, 2011; and transfer of assets to Lewis County by October 2011. The transfer of assets was finalized in January 2014, and Lewis County owned the system as of April 30, 2014.

Prior to the receivership, the City managed the system. A run of 16 main breaks from 2006 to 2010 placed the City on ten boil water advisories issued by the DOH. Then the City faced a budget deficit in 2010, was under investigation by the State Auditor, and was unable to financially and managerially operate the water system. DOH, the City and Lewis County met to explore options and found that the best solution was to appoint Lewis County receiver of the public water system (PWS).

Another event prior to the receivership was the dissolution of the Enchanted Valley Country Club (EVCC) in 2009 and purchase of the system by the City of Vader in June 2009. The EVCC system was a Group A community public water established in February 1980 of 107 approved connections and known as PWS #23390Y. However, problems with the shallow groundwater wells necessitated emergency water purchase of water from the City of Vader in 1978 with approved wholesale purchase of water in June 1980.

DOH formally approved and the merged the EVCC system into the City system on October 14, 2010.

The Vader-Enchanted Valley water system is a Group A community water system known as PWS #90900E and approved in 2010 for 369 connections by DOH.

1.3 RETAIL SERVICE AREA

The County provides water service to customers within the water service area shown in Figure 1.1. This area is made up of land within the City limits, City Urban Growth Area (UGA) and Lewis County. This service area is also the same as the Retail Service Area (RSA). The service area has not changed from prior WSPs (2010, 2008, 1997) when the system was under City management. For this water system, the Existing Service Area, Retail Service Area, Future Service Area and Water Rights Place of Use share coincident boundaries, as shown in Figure 1.1.

The City was incorporated in 1906 and has a land area of approximately 592 acres within city limits and of 390.3 acres in their UGA. Once a populous timber town in the early 1900s, it is a primarily residential town serviced by a city hall, local restaurant, post office, and two grocery stores with over 65% low-moderate income households per the an income survey undertaken by the Utility in April 2014.

Lewis County was established in 1854 and is situated in southwest Washington. The county seat is Chehalis which lies midway between the two metropolis Seattle, WA and Portland, OR. The country has a land area of about 2,435 square miles and is predominately rural. There is about 177.3 acres of county lands in the service area.

1.4 POLICIES

Policies and agreements are in place to ensure compliance and consistency of a variety of circumstances. Utility policies are in Title 13 of the Lewis County Code (LCC) with administration by the Director of Public Works. Engineering, solicitation of services, maintenance and operation, funding administration, and land development approvals follow the Department's policies and practices for public works projects. Fiscal matters of payment, receipt, and cash handling follow compliance with the Lewis County Auditor Office. Budgeting and public hearings follow Board procedures. Fees are established by Board of County Commissioner (BOCC) resolutions. Land development activities in the city are under City jurisdiction and administration, and follow their regulations. Land development activities in county lands are administered and follow county regulations.

A Standard Operating Procedures (SOP) Manual has been developed using the aforementioned county policies and relevant state and federal regulations. Because county staff tasked to manage and operate the Vader-Enchanted Valley water system work in different departments and divisions, the SOP Manual was developed to provide guidance. The SOP outlines procedures for monitoring daily Plant operations, processing work orders, opening and closing accounts, dealing with customer complaints, handling delinquent accounts, placing liens, repairing main breaks, reporting requirements to be in compliance, and other procedures foreseen in the operation and management of the utility.

The Administrator of the water utility is the Director of Public Works. Assistance to the Administrator is provided in a workgroup forum with representation by operations, engineering, administrative and fiscal staff. This workgroup reviews and resolves issues. Outcomes may be used to define practices, develop procedures and form policies.

1.4.1 Duty to Serve

The Utility will serve connections located within the RSA when all of the following threshold factors in WAC 246-290-106 are met:

1. The request is consistent with the City's and County's plans and development regulations.
2. There is sufficient capacity to provide water in a safe and reliable manner.
3. There are sufficient water rights to provide water service.
4. It can be available in a timely and reasonable manner.

The procedure for water service application triggered by building permits, land development reviews, land use changes and requests for water service are discussed in Chapter 9.

1.5 RELATED PLANS AND REFERENCES

A list of documents and references used in developing this WSP is provided in Table 1.1.

TABLE 1.1 – LIST OF INFORMATION AND REFERENCES
"City of Vader Comprehensive Water System Plan" by Gray & Osborne, Inc. May 2008.
"City of Vader, Comprehensive Water System Plan Amendment" by Gray & Osborne, Inc. September 2010.
"Draft Vader Water System Comprehensive Plan" by Gray & Osborne, Inc. December 1997.
"Engineering Report on the Water System for Enchanted Valley Country Club" by Gibbs & Olson, Inc. December 1994.
Water Facilities Inventory for Enchanted Valley, #23390Y by DOH.
Lewis County Land Use plans and zoning maps.
"Lewis County Comprehensive Plan", November 25, 2013.
"Lewis County Multi-Jurisdictional Hazard Mitigation Plan", adopted July 26, 2010.

1.6 REVIEWS AND RESPONSES

All pertinent review and response documents for the WSP are in Appendix B. Copies of the draft WSP were provided to DOH, the Lewis County Community Development Department and the City for review. Consistency reviews and approvals were made by Lewis County

Community Development and the City. Lewis County met with DOH on December 3, 2013 to discuss the proposed planning efforts of this WSP. Notes from the Pre-Plan meeting along with public meeting, BOCC approval and other pertinent documents to show review and planning efforts of this WSP are also in Appendix B.

Because the water system has less than 1,000 connections, the WSP is exempt from the provisions of the State Environmental Policy Act (SEPA).

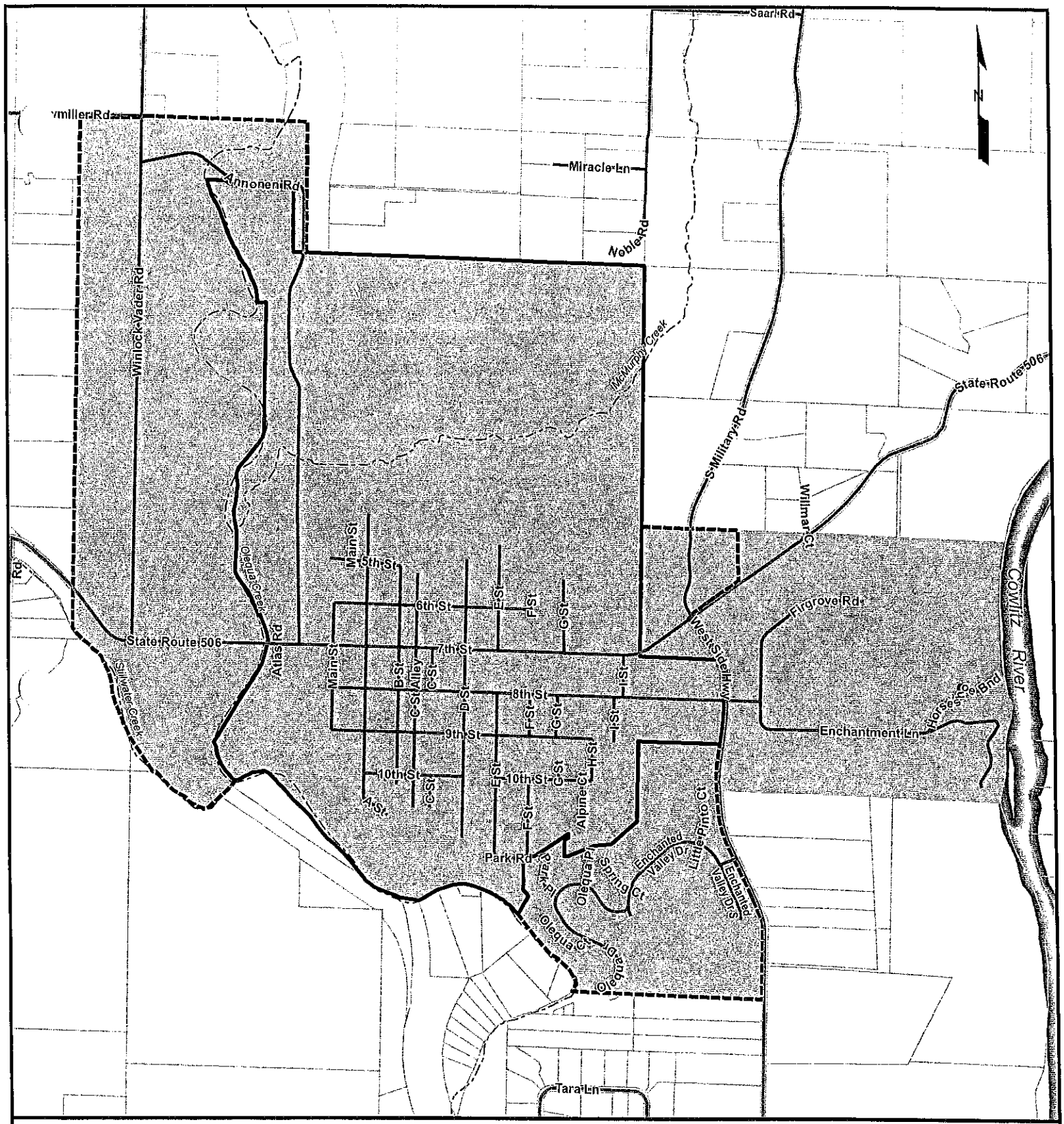

Lewis County, Washington

0 750 1,500 Feet

The water service area shown is based on Gray & Osborne, Inc. Consulting Engineers plan maps that were adopted by the City of Vader in 2010 and approved by the Department of Health.

The Retail Service Area, Existing Service Area, Future Service Area, and Water Rights Place of Use are the same areas, and thus are all represented by a single shade on this map.

Projection: Lambert Conformal Conic
Datum: 1983 North American Datum
Coordinate System: State Plane Washington South

Vader - Enchanted Valley Water System

Figure 1.1 - Water Service Area

City Limits

Urban Growth Area

Retail Service Area, Existing Service Area, Future Service Area, and Water Rights Place of Use

July 2016

2. DESCRIPTION

This chapter describes the natural features of the service area, the history of the utility from incorporation of the city in 1906 to current ownership by Lewis County, and the facilities of the utility.

2.1 NATURAL FEATURES

The supply source for the utility is the Cowlitz River. The headwaters of the Cowlitz River originate off the east side of Mt Rainier and surrounding mountains. Although the source and intake for the utility are outside the service area limits, the general descriptions of the natural features of the service area are provided to help understand and plan for maintenance and new construction projects. Various natural features are discussed in this section: geography; climate and precipitation; and geology.

2.1.1 Geography

The service area is located on a gently rolling hill that slopes from the northeast to the southwest bordered by the Cowlitz River to the east and by Olequa Creek (a tributary to the Cowlitz River) to the west and south. The UGA portion of the service area slopes from the north to the south toward Olequa Creek. Elevations range from about 90 ft (NGVD 1929) near the Cowlitz River to 280 ft in the northeast section of the service area. SR 506 runs east to west through the middle of the RSA.

2.1.2 Climate and Precipitation

On average, the area has the same climate as that of the greater Puget Sound region since there are no significant natural topographic barriers affecting Lewis County from the rest of the Sound. Most of the region's rainfall occurs during the colder months, between October and April, in conjunction with the frequent passage of low pressure systems (storm systems) through the area. Winter temperatures typically range from 35 to 45 degrees F with freezing temperatures from 50 to 80 nights per year. The region is free of frost about 160 days a year. The influx of storm systems during the fall and winter months also present the area with significantly higher winds due to the intense nature of low pressure systems. The region's highest occurrence of cloud cover is also during the fall and winter months because of the increased number of low pressure systems and precipitation activity.

The warmer months, May through September, experience significantly less rainfall due to the fact that the main jet stream that prevails over the Pacific Northwest during the colder months shifts its position to the north, and takes much of the precipitation along with it. Temperatures typically range from 70 to 80 degrees F.

The area receives an average of 81 inches of rainfall per year with almost 50 percent occurring in the period between November and January. December is historically the wettest month, and July the driest.

2.1.3 Soils and Geology

The underlying geology of western Lewis County is predominately sedimentary and igneous rock approximately 10,000 ft deep. The area has been subject to recent flood deposits of gravel, sand and silt along Olequa Creek and its tributaries. Older landslide deposits exist east of the City along the slopes that form the eastside of the Grand Prairie. These landslide deposits extend up the Lacamas Creek valley, within Drews Prairie, near the water supply source from the Cowlitz River.

There are primarily three soil series in the service area: mostly Olequa with smaller areas of Lacamas and Klaber. The Olequa series consist of deep, well drained soils on stream terraces. The latter soil series consist of very deep, poorly drained soils.

2.2 HISTORY OF THE SYSTEM

Lewis County was established in 1845 and situated in southwest Washington. The City was incorporated in 1906 in Lewis County.

The first water source for the City was a small creek located on a hill southwest of the town. A wood stave transmission line brought the water by gravity from the original reservoir to customers. Several small wells located near the site of the current wastewater treatment plant (WWTP) were used in the 1940s but have been since been abandoned. Due to contamination of the creek and periodic breakages of the wood stave line, the creek supply source and transmission line were replaced in 1963 with an intake and pump station on the Cowlitz River.

In 1963, the new facilities consisted of an intake and pump station on the Cowlitz River situated east of city limits, a water filtration plant, one 60,000-gallon reservoir and 8-inch transmission main from the plant to Main Street. The plant and reservoir were at the site of the current plant. The intake consisted of 170 ft of perforated pipe buried below the river and a raw water (RW) pumping chamber located adjacent to the riverbank. Water was pumped up to the plant, treated, stored in the reservoir and distributed throughout the system.

In 1973, the Enchanted Valley Country Club (EVCC) was established of residential and recreational camp lots. The EVCC development is adjacent to the City and governed by a home owners association (HOA). The EVCC water system consisted of five shallow wells, a 50,000-gallon redwood tank, a pump house and several thousand feet of distribution main.

In 1978, EVCC made an agreement with the City for emergency water supply by way of a 2-inch intertie with the Vader water system. The EVCC system was eventually determined to be inadequate after several episodes of low water quantity and poor water quality. The EVCC approved an agreement with the City for wholesale purchase of water in 1980.

In 1979, several upgrades were made to the water treatment system. These improvements included constructing a 250,000-gallon steel reservoir; upgrading the water treatment plant with chemical additions; and increasing filtration capacity to 150 gpm. The existing 60,000-gallon reservoir was converted to a clearwell. The intake structure was also rebuilt in 1979 after a landslide and high water destroyed the original structure.

In 1980, the City expanded its agreement with EVCC from emergency water supply to a year-round water supply for domestic use. The agreement for wholesale water purchase was renewed in 1995 and extended through 2015.

In 1983, land movement and high water damaged the intake facility again. Modifications were made to provide water at their sole source. The system consisted of a submersible pump set directly in the river which pumped water through a 4-inch fire hose to a small wet well. The wet well is located next to the abandoned RW well and intake system. Pumps located at the wet well then pump water up to the Plant.

In 1990, a 10-inch transmission main was installed from the plant to 6th Street. Many of the small 2-inch and 4-inch distribution mains were replaced with larger pipes to improve fire flow. About 5,000 lf of 8-inch and 6-inch lines were constructed in the old downtown area, and an 8-inch line was constructed in the southeast part of the city to improve pressure during high demand periods.

In 1993, polymer baffle curtains were installed in the clearwell to increase disinfection contact time and the 2-inch line to EVCC was replaced with a 6-inch line.

In 1995, several elements of the intake facility were damaged. The transmission of RW to the plant was interrupted when a section of the RW transmission main broke in a landslide in July 1995. Then the temporary submersible pump set in the river failed in August 1995. Fortunately enough stored water was available in both cases so that the system was never completely out of water.

In November 1995, the transmission pumps located adjacent to the river were damaged by flooding of the Cowlitz River. The pumps were out of commission for one week. Storage was depleted in two days and water was trucked from the City of Winlock for one week. The pumps and electrical systems at the intake facility were rebuilt and restored to functional order.

In 2002, the plant was replaced with a new, dual train Microfloc rapid sand filtration system with an adsorption clarifier and a filter backwash treatment system. The new plant uses alum, polymer and soda ash pre-filtration chemical feed systems, and sodium hypochlorite post-filtration chemical feed system. The filter backwash treatment system consists of two asphalt-lined backwash settling basins.

At the same time of these plant improvements in 2002, improvements were made on the raw water intake and pumping system. The top of the wet well was raised 1.5 ft, a new building was constructed over the wet well, and three new vertical turbine pumps were installed in the wet well building. The new river intake system consists of a valve vault on the shore with an 8-inch HDPE line extending underground into the river with a tee on the end. Stainless steel expanded metal screens were constructed over the two openings of the tee. A submersible pump is inserted into the 8-inch HDPE conduit line with a 4-inch flexible hose so the pump can be easily removed for servicing. The submersible pump in the 8-inch HDPE pumps water through the 4-inch hose to the wet well. The vertical pumps in the wet well building then pump the water to the treatment plant.

Sometime afterwards in 2002, one of the expanded metal screens on the intake tee was replaced with a larger, more elaborate screen because the screens kept plugging.

In 2004, the intake screen was again replaced with a Johnson wire-wound stainless steel screen and modified with an air compressor and one-inch air line. These modifications were made to provide air scour cleaning of the screen.

In 2006, the City replaced 1,000 ft of aging 4-inch water main along 9th Street, A Street and 10th Street with a new 8-inch main and service lines.

In January 2009, the Cowlitz River flooded and damaged one intake pump and the lower portion of the gravel access road to the intake facility. In July 2010, the damaged intake pump was repaired and installed, and gravel was placed in the eroded section of the road at the foot of the hill using FEMA funding to the City.

In 2009, the EVCC HOA was dissolved in October 2008 and the City purchased the EVCC water system in June 2009. At the time, the EVCC system was a Group A community public water established in February 1980 for 107 approved connections and known as PWS #23390Y. Problems with their shallow groundwater wells necessitated the emergency water purchase from the City in 1978 with approved wholesale purchase of water in June 1980.

In late 2009, the City met with DOH and Lewis County to determine options to get the system into compliance. A run of 16 main breaks from 2006 to 2010 placed the City on ten boil water advisories issued by DOH. Then the City faced a budget deficit in 2010, was under investigation by the State Auditor, and because of current debt and poor credit rating was unable to financially and managerially operate the water system. In order to continue to operate the water system and be in compliance, the City voluntarily placed a moratorium on new city water and wastewater connections. DOH, the City and Lewis County met to explore options and found that the best solution was to appoint Lewis County receiver of the public water system (PWS).

On October 14, 2010, DOH formally approved and merged the EVCC system into the City system in anticipation of the court receivership. The Vader-Enchanted Valley water system is a Group A community water system known as PWS #90900E and approved in 2010 for 369 connections by DOH.

It is unclear when specific elements of the EVCC water system were abandoned, but we know at the time of DOH approval in October 2010: the redwood tank was dismantled, the pump house was inoperative, and all wells were disconnected from the system. Some pertinent sections from the 1994 WSP for the EVCC were:

> "It is recommended the Country Club transfer the ownership for the wells and associated water rights to property owners or abandon the wells in accordance with DOE guidelines."

"...one or two of the wells are presently being used as private wells for sprinkling; however no cross connections were observed. The existing booster pump station is still connected to the system and separated by a closed valve."

There is an absence of documentation from the EVCC and City pertaining to the five wells. Anecdotes hint at destruction and removal of documents during a contentious period in mid-2000. As an effort to find closure, Lewis County requested an information search from State Department of Ecology (Ecology) about the EVCC wells to determine if the wells were abandoned with Ecology guidelines and the status of these wells' water rights. Lewis County also researched Ecology's well log database. No information was found.

On October 29, 2010, Superior Court awarded the water system to Lewis County with the plan to have transitional operation and management by Lewis County immediately, full operation and management by Lewis County on January 1, 2011; and transfer of assets to Lewis County by October 2011.

On January 1, 2011, Lewis County began full operation and management of the water system.

In 2012, Lewis County replaced 6,700 lf of brittle asbestos concrete (AC) lines with 8-inch PVC mains complete with gate valves and combination air release and vacuum valve assemblies; constructed 1,940 lf of new HDPE transmission line to replace an AC transmission line; constructed four sampling stations; and 77 new service connections complete with new meters and customer shutoff valves. Many of the new main replacements and associated work were identified as capital improvement projects in the 2010 WSP Amendment (TR-2, TR-3, D-2, D-3, D-4, D-5, D-6, D-9, D-10, M-2).

In 2013, Lewis County contracted for a diver inspection of the clearwell and 250,000-gallon steel tank, and reviewed the status of the remaining CIP projects in the 2010 WSP Amendment. The reservoir inspection was CIP project ST-1. Project D-1was deemed not immediate as the State Department of Transportation decided to monitor the existing pipe supports instead of new, flexible pipe supports (May 2007). Project TR-1 is replacement of two drain grates in the plant. We believe this was completed by the City as the drain grates in the plant at the time of receivership was in adequate condition. A tabulation of the status of the CIP projects listed in the 2010 WSP Amendment is in Chapter 10.

In February 2014, the agreement to transfer the assets of the water system from the City to Lewis County was approved after communication was clarified between the City mayor and councilmembers. Conditions for resumption of the system by the City were also in the agreement. County ownership of the system complete with water right, facilities, land and easements was effective on April 30, 2014.

2.3 SYSTEM FACILITIES

Descriptions of the water system facilities owned and managed by Lewis County are provided in this section. A water system map is provided as Figure 2.1.

2.3.1 Supply Source

The supply source is the Cowlitz River. The intake system consists of a screened intake with an air scour cleaning system, a submersible pump and a 4-inch flexible pipe that discharges to a small wet well. A vertical turbine pump draws water from the wet well to the Plant using a dedicated transmission main. The transmission main traverses an area that is extremely susceptible to landslides as described in Section 2.2.

The system has one water right for surface water diversion from the Cowlitz River for municipal use. Maximum instantaneous flow is 0.50 cfs or about 224 gpm. The original priority date of the water right is November 9, 1961. A maximum annual volume is not specified. The point of withdrawal along the Cowlitz River was changed in 1972 which changed the priority date to November 11, 1972. Unlike currently issued water rights, those issued in the 1960s to 1970s commonly did not have an annual withdrawal amount. A copy of the water rights certificate #9616 is in Appendix C.

2.3.2 Intake Facilities

The raw water intake consists of a 8-inch HDPE line that runs approximately 20 ft from the river bank and terminates in a 10-inch tee with stainless steel 1/8-inch screens that are back flushed with compressed air. The air line runs from a compressor in the pump station building to allow the operator to back flush the screens. Problems exist with sediment collecting in the intake pipeline. The river pump conveys approximately 200 gpm into the clearwell of the raw water pump station, and is controlled by two floats located in the clearwell. Unless the screen becomes plugged, the average operation for the river pump when the Plant calls for water is 15 minutes on and 45 minutes off.

The raw water pump station consists of three vertical turbine pumps. The pumps are called by the water level in the 250,000 gallon reservoir. With one pump operating, 190 gpm of raw water can be conveyed to the Plant. Two pumps can deliver in excess of 225 gmp. Design criteria for the raw water intake and pump station are presented in Table 2.1.

TABLE 2.1 – RAW WATER PUMP STATION DESIGN CRITERIA

	Quantity	Type	Motor Size	Capacity
River Pump	1	4-inch submersible Crown well pump	3 hp	200 gpm
Pump Station	3	Crown vertical turbine pump	25 hp	190 gpm per pump

Improvements to the intake facility were made immediately in the winter season following the October 2010 court order of receivership. New locks were installed on the gates at SR 506 and at the water treatment plant. The gate and fencing at the intake pump house were secured.

Other improvements made at the intake facility were:

- Constructed a new baffle in the intake clearwell in 2012.
- Installed new seals and bearings on intake pumps #1 and #3 in 2014.
- Purchased new seals and bearings for pump #2.

- Rebuilt intake pump #1. (New pump shaft as years of misalignment had caused asymmetrical wear of the shaft.)
- Reconstructed access road.
- Cleared vegetation along access road, entrance gate and pump house.
- Installed new signage at the entrance gate.

The City of Vader had intake pump #3 rebuilt in July 2010. The work was performed by PumpTech, Inc, Bellevue, WA.

The raw water transmission line delivers water from the raw water (RW) pump station to the Plant via a single 4-inch HDPE water line up to SR 506, along SR 506 until heading up the hill to a valve group just below the plant. The line then transitions to C-900 pipe and runs to the plant. The improvement to C-900 was completed in 2016 and corrects an inherent weakness in the system. In 2012, a new segment of HDPE transmission line was constructed and placed immediately in use. The AC segment from the intake structure to SR 506 is isolated from use but is intact as a backup transmission line.

2.3.3 Water Treatment Plant

The filtration system uses two 100 gpm capacity units consisting of an adsorption clarifier followed by a mixed media filter. The dual filter design allows the plant to continue filtering water while one filter undergoes backwashing. The backwash basins are designed to operate in parallel to allow one basin to be taken out of service for cleaning. Design criteria for the treatment plant are provided in Table 2.2.

TABLE 2.2 – TREATMENT PLANT DESIGN CRITERIA

	TOTAL AREA		UPFLOW RATE		BACKWASH RATE	
Adsorption Clarifier	10 sf/unit		10 gpm/sf			
Mixed Media Filter	20 sf/unit		5 gpm/sf		150 gpm/ft @ 60° F	
	NUMBER		TYPE		MOTOR SIZE	
Filtered Pump	2		End suction close coupled		3 hp	
Backwash Pump	1		Vertical turbine		10 hp	
Air Scouring Blower	1		Regenerative		3 hp	
CHEMICAL FEED SYSTEM	TANK VOLUME	TANK DIMENSIONS	PUMP TYPE	QTY OF PUMPS	CAPACITY	MIXER MOTOR SIZE
Alum coagulant	150 gal	32"Dx47"H	Positive Displacement Diaphragm	2	108 gpd	¼ hp
Caustic soda ash	150 gal	32"Dx47"H		2	108 gpd	¼ hp
Polymer	100 gal	30"Dx38"H		2	60 gpd	1/3 hp

Alum is used as a coagulant and polymer as a filter aid. Soda ash is used to offset the pH depression caused by the alum. Both the alum and soda ash are injected in the pumped RW line ahead of the static mixer and prior to filtration. A small amount of polymer is injected after the static mixer upstream of the adsorption clarifier. Following injection, the finished water (FW) is sent to a clearwell. Sodium hypochlorite is injected in the FW line prior to the clearwell. The clearwell and 250,000-gallon reservoir are used to provide contact time for the disinfectant. Turbidity is measured in the RW upstream of the first chemical injection points as well as on the FW from each filtration unit. Chlorine residual is measured using a chlorine residual analyzer. All chemical feed systems are controlled by a programmable logic controller (PLC) based on flow into the Plant. Backwash is also controlled by the PLC through monitoring the liquid level above the filter media. The polymer feed is currently not programmed to operate based on plant flow.

The Plant monitors the volume of RW pumped to the Plant from the intake facility, of FW used to backwash treatment filters, and of FW sent to the distribution system. These meters are housed at the Plant.

Lewis County made several maintenance improvements to the plant building immediately after the day of receivership. The following actions were made:

- Placed new locks in the office, plant and gate.
- Installed new heaters in the office and in the plant.
- Repaired and sealed exposures and breaks of the building exterior.
- Replaced interior and exterior lighting with new energy efficient lighting.
- Cleared grounds of vegetation, debris and old material stockpiles.
- Created and organized material inventory.
- Constructed new roofs for the plant and detached storage shed.
- Erected new porch.
- Posted new signage at the plant gate.
- Leased portable toilet facility.
- Established regular garbage service.

2.3.4 Storage

The system has a 250,000-gallon covered steel reservoir which was constructed in 1979. The ground level type reservoir is located next to the Plant with a base elevation of 315 ft, an overflow elevation of 329 ft and a diameter of 55 ft.

Additional storage is provided by the old reservoir under the Plant building which is now used as a 60,000-gallon clearwell. The clearwell is used to provide contact time for adequate chlorine residual in the distribution system.

2.3.5 Distribution System

The current transmission mains from the Plant are a 10-inch main to 6th Street, and a 6-inch line to EVCC. The distribution system is made up of pipes ranging from 2-inch to 10-inch pipes, and of PVC, HDPE, AC and ductile iron (DIP) materials. Generally, the 2- through 4-inch pipes were installed in 1979; and the 6- through 8-inch pipes were installed in 1990 to increase system

pressure for emergencies. Lewis County replaced 2-inch plastic, 4-inch AC and 6-inch AC lines with 8-inch PVC pipes in 2012. Wherever possible, the 2012 improvements looped the distribution system and installed blow off assemblies at the downstream ends. The 2012 improvements also connected the distribution lines in the City and EVCC. A tabulation of total lengths and sizes of water mains are summarized in Table 2.3.

TABLE 2.3 – DISTRIBUTION SYSTEM PIPE INVENTORY		
DIAMETER (inches)	PIPE MATERIAL	LENGTH (ft)
10	PVC	4,466
	DIP	50
8	PVC	16,834
	DIP	116
6	PVC	11,989
	AC	6,726
	DIP	39
4	PVC/HDPE	6,957
	HDPE (transmission line)	3,796
	AC (transmission line, isolated)	1,974
2	PVC	10,684
	TOTAL	63,631 ≈ 63,630

AC Asbestos Cement
DIP Ductile Iron Pipe
HDPE Hard Density Polyethylene
PVC Polyvinyl Chloride

The RW transmission line from the intake to the Plant is a 4-inch line: PVC from the intake to SR 506 and AC from SR 506 to the Plant. In 2012, the AC line was replaced with a 4-inch HDPE; but the AC line was left intact and isolated (valved) from use.

2.3.6 Service Meters

There are meters for all services in the system. Service meters were installed for the local WWTP in 2011 and for the local fire service in 2012. Prior to 2011, the system was metered using about nine different brands of meters. Meters in the city read in gallons and meters in EVCC read in cubic feet. Meters were replaced for the entire system in 2015 to read in gallons.

2.3.7 Pressure Zones

The system operates entirely on one pressure zone with no pressure reduced and no boosted pressure zones.

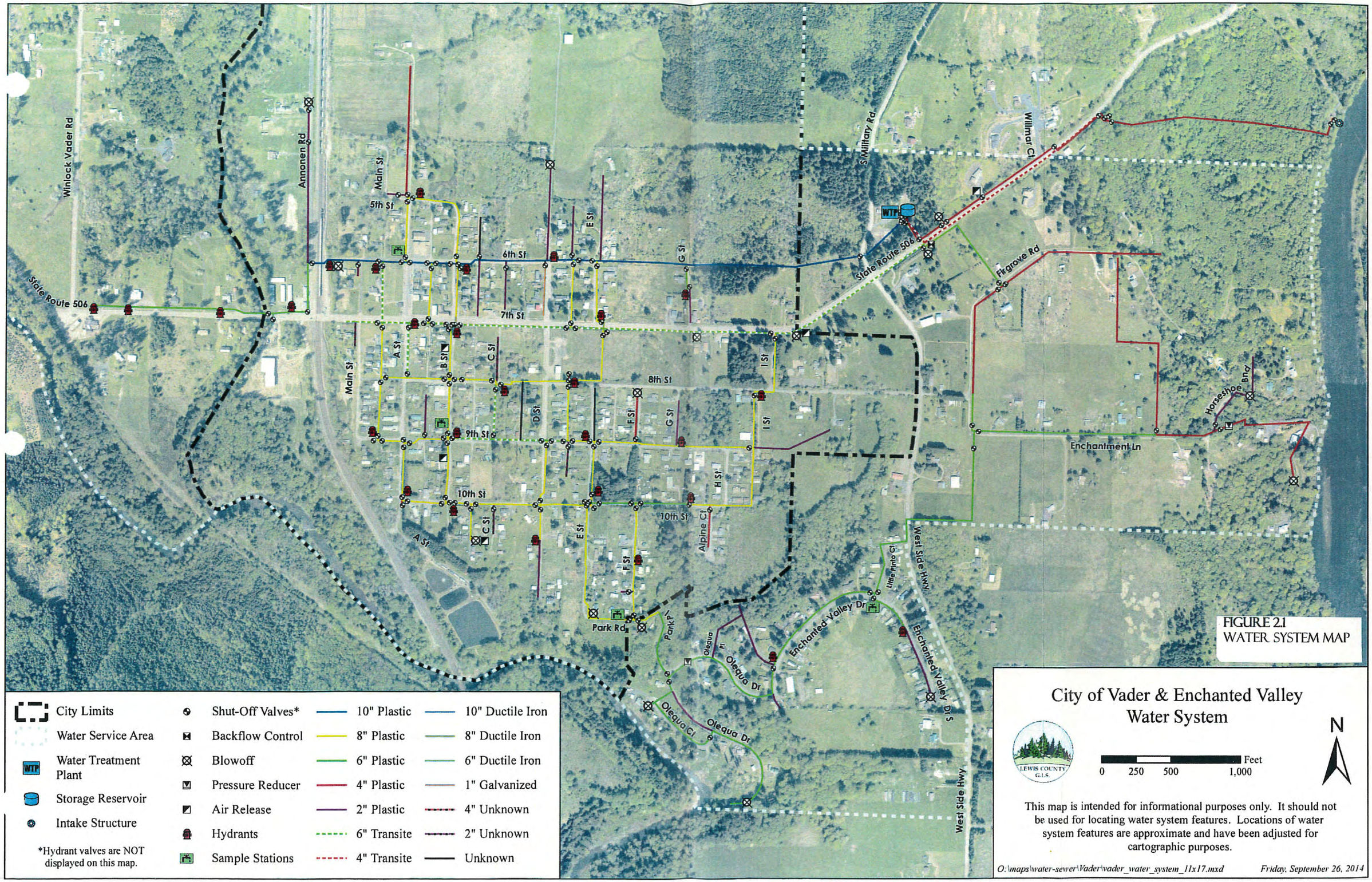

FIGURE 2.1
WATER SYSTEM MAP

3. PLANNING DATA AND DEMAND

General planning information for the utility is given in this chapter. A discussion of the State Growth Management Act and its influence upon the utility service area is provided. It is followed by a summary of current and future land uses, current and future population, water use characteristics and demand forecast.

3.1 GROWTH MANAGEMENT ACT

The State Legislature passed the Growth Management Act (GMA) in 1990 to require local governments in rapidly growing cities and counties to plan for projected growth. The GMA encourages urban growth areas (UGA) that can be supported with adequate facilities, and it encourages setting aside other areas for rural uses and resource protection. Local communities are required to design UGAs to include "areas and densities sufficient to accommodate the county's expected growth for the succeeding 20 years" (GMA, Section 12, RCW 36.70A.12)). Communities will review and revise their plan every ten years to assure that projected growth can be accommodated.

The City has established UGAs, and Lewis County has folded their planning boundaries into the county comprehensive plan. These growth boundaries have been coordinated with the water utility service area to assure support of the community's planned growth without decreasing the level of service to our customers.

3.2 SERVICE AREA

The County provides water service to customers within the water service area shown in Figure 1.1. This area is made up of land within the City limits, City UGA and Lewis County. This service area is not anticipated to change in the foreseeable future.

3.3 LAND USE AND ZONING

A summary of the existing and future land use of the service area is provided in Table 3.1 and Figure 3.1. A comprehensive discussion of the City's UGA and land use is available in the City of Vader's Comprehensive Plan, 2010. Information for land use in the service area was from Lewis County GIS. No change in land use is projected.

TABLE 3.1 – LAND USE DISTRIBUTION

LAND USE DESCRIPTION	EXISTING		FUTURE	
	ACREAGE	PERCENT	ACREAGE	PERCENT
Residential	960.9	82.8	960.9	82.8
Commercial	120.7	10.4	120.7	10.4
Industrial	31	2.7	31	2.7
Community Services	47.3	4.1	47.3	4.1
TOTAL	1159.9	100.0	1159.9	100.0

3.4 POPULATION

3.4.1 Historical Population

The State Office of Financial Management (OFM) estimates the population within each county using U.S. Census Bureau data. County and city governments in each county then allocate the projected population to the cities and unincorporated areas in their county.

The city population in the last fourteen years ranged from 589 to 625 people. The peak population was 625 in 2011 and 2012, and it dropped to 620 in 2013 and 2014. The line graph shows the historical trend in population growth for the City of Vader based using OFM data.

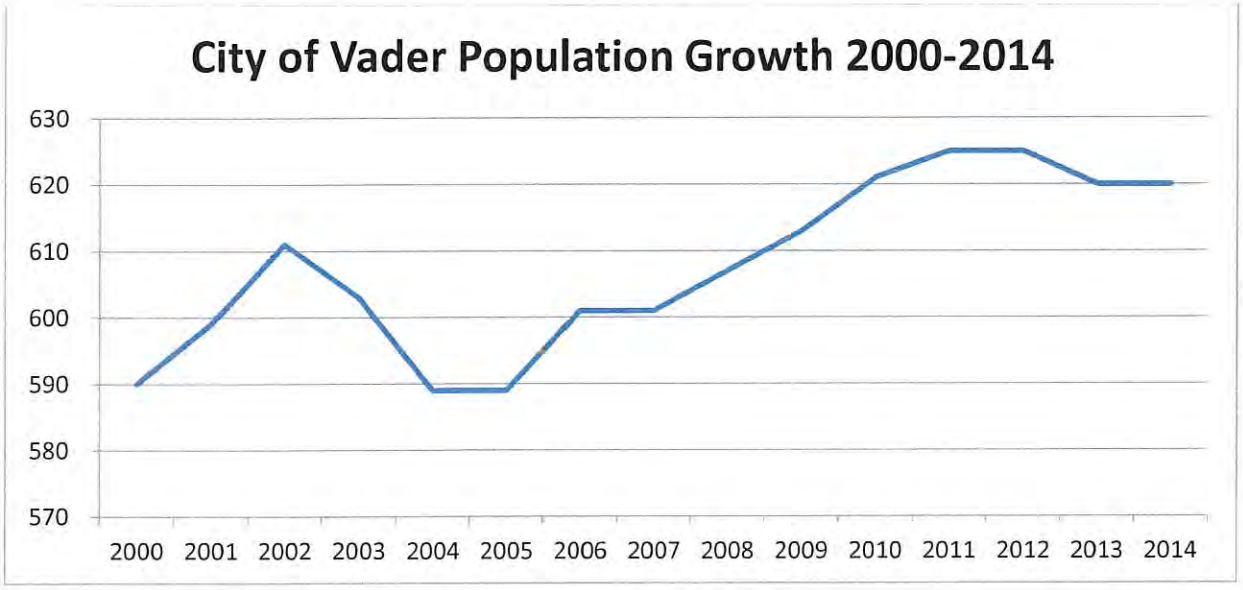

Our service area also includes EVCC and county UGA areas of which populations in these areas are listed in OFM's category of unincorporated Lewis County. These areas represent a small portion of unincorporated Lewis County. The unincorporated county population values were analyzed to see if the Vader growth followed a countywide trend and if any growth was projected in the unincorporated areas. The data shows a trend of insignificant population growth in the last three years similar to the Vader graph. The population data is also presented in Table 3.2.

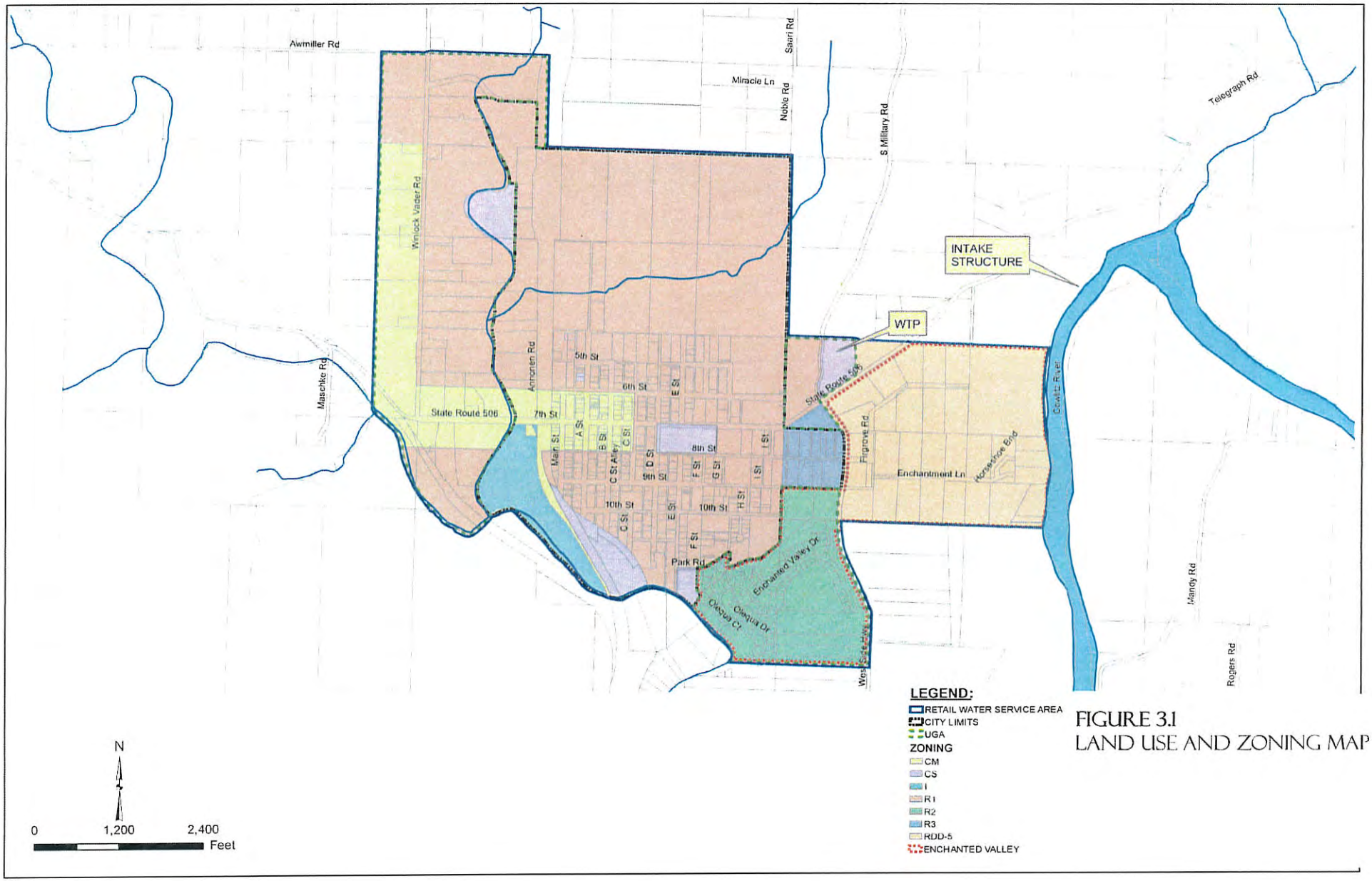

FIGURE 3.1
LAND USE AND ZONING MAP

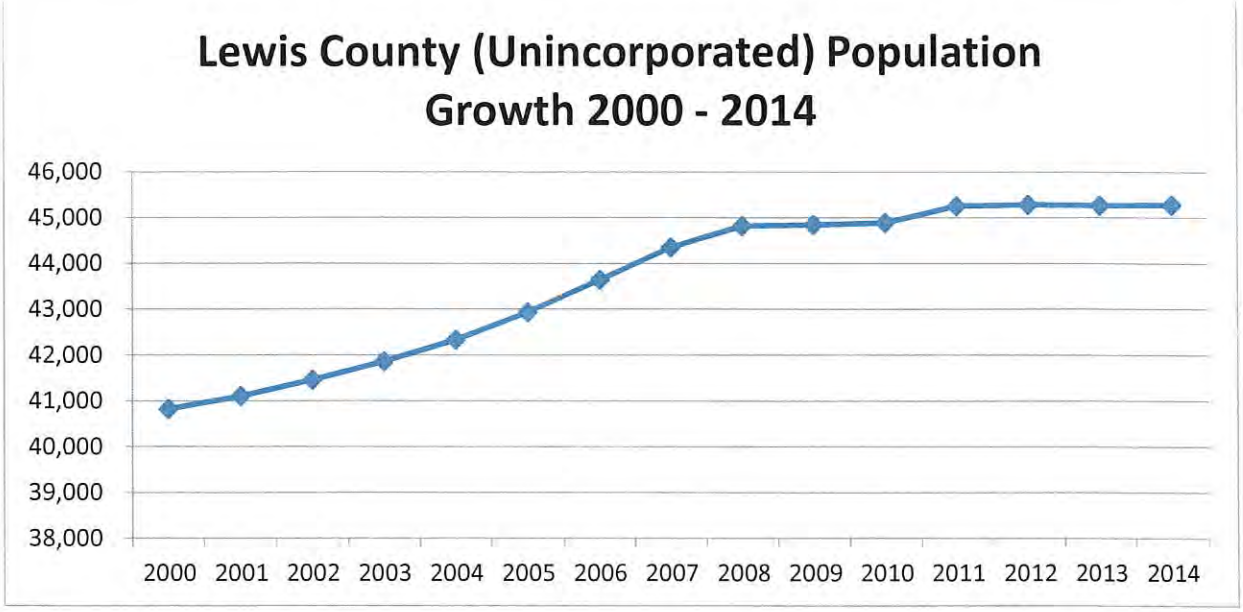

	TABLE 3.2 – HISTORICAL POPULATION			
	CITY OF VADER		LEWIS COUNTY, UNINCORPORATED	
YEAR	POPULATION	ANNUAL GROWTH (%)	POPULATION	ANNUAL GROWTH (%)
2000	590	-	40,821	-
2001	599	1.5	41,102	0.7
2002	611	2.0	41,456	0.9
2003	603	-1.3	41,856	1.0
2004	589	-2.3	42,334	1.1
2005	589	0	42,935	1.4
2006	601	1.8	43,637	1.6
2007	601	0	44,352	1.6
2008	607	1.0	44,822	1.0
2009	613	1.0	44,849	0.06
2010	621	1.3	44,892	0.09
2011	625	0.6	45,260	0.8
2012	625	0	45,285	0.05
2013	620	-0.8	45,270	-0.03
2014	620	0	45,280	0.02

The water system serves residents in the EVCC area which is outside of Vader limits. The EVCC water system, before it was purchased and included into the Vader system, was approved for 107 connections according to DOH records. Since operation of the system, the number of accounts in EVCC has ranged from 89 to 102 accounts with an average of 96 accounts. This information is based on utility billing records with a higher degree of confidence placed on records from 2011. The EVCC was developed for single family residences and the EVCC service area has remained the same since the 1970s.

The population of our service area was determined using OFM data and the approved average number of connections for EVCC. Table 3.3 estimates the population based on water customer records and the national average household size of 2.43 people per household (2010 Census, www.census.gov).

TABLE 3.3 – CUSTOMER POPULATION								
YEAR	CONNECTIONS					POPULATION		
	City SFR	EVCC SFR	Total SFR	Commercial	Total	City*	EVCC*	Total
2010	233	89	322	12	334	566	216	782
2011	247	90	337	14	351	600	219	819
2012	247	94	341	14	355	600	228	828
2013	244	96	340	15	355	593	233	826
2014	245	99	344	15	359	595	241	836
2015	249	98	347	14	361	605	238	843

*Single Family Residential Population is based at 2.43 people/connection.

3.4.2 Projected Population

A growth rate of 2.5% was used in the 2008 WSP so our analysis assumed this 2.5% projection. Table 3.4 tabulates a population projection based on a growth rate of 2.5%, and number of single family service connections based on 2.43 people per household.

Table 3.4 also tabulates projections for population and service connection based on an adjusted growth rate. An adjustment to 1.2% was considered because of: 1) the economic downturn that started in 2008 and subsequent slow recovery; 2) the alignment of the UGA boundaries for this population forecast with the current service area boundaries; and 3) the dissolution of the Vader school district in 2007. All of these factors indicate slow economic growth of the area.

Both of these projections are tabulated in Table 3.4 for comparison.

	TABLE 3.4 – PROJECTED POPULATION							
	Population at 2.5%				Population at 1.2%			
Year	Existing	Projected	Total	#SF Connections	Existing	Projected	Total	#SF Connections
2015	**843**	**0**	**843**	**347**	**836**	**0**	**836**	**347**
2016	843	21	864	356	846	10	856	351
2017	864	22	886	365	856	10	866	355
2018	886	22	908	374	866	10	877	360
2019	908	23	931	383	877	11	887	364
2020	931	23	954	393	887	11	898	368
2021	**954**	**24**	**978**	**402**	**898**	**11**	**909**	**373**
2022	978	24	1002	412	909	11	920	377
2023	1002	25	1027	423	920	11	931	382
2024	1027	26	1053	433	931	11	942	386
2025	1053	26	1079	444	942	11	953	391
2026	1079	27	1106	455	953	11	965	396
2027	1106	28	1134	467	965	12	976	400

2028	1134	28	1162	478	976	12	988	405
2029	1162	29	1191	490	988	12	1000	410
2030	1191	30	1221	503	1000	12	1012	415
2031	1221	31	1251	515	1012	12	1024	420
2032	1251	31	1283	528	1024	12	1036	425
2033	1283	32	1315	541	1036	12	1049	430
2034	1315	33	1348	555	1049	13	1061	435
2035	**1348**	**34**	**1381**	**569**	**1061**	**13**	**1074**	**440**

3.5 WATER USE CHARACTERISTICS

3.5.1 Production and Peaking Factor

The utility uses a billing year instead of a calendar year. Water billings are made on even numbered months and on a bimonthly cycle so a billing year is from December of the preceding year through November of that year.

Water production data is collected daily from the source meter at the Plant. Table 3.5 shows the annual production of water from 2010 to 2015 as gallons and as average day which is the annual production divided by 365 days. Table 3.6 shows the monthly production of water from 2011 to 2015. Data for the billing year 2010 is presented for comparison purposes in Table 3.5; and is not used in this WSP to derive existing system characteristics and forecasting.

TABLE 3.5 – ANNUAL WATER PRODUCTION

YEAR	TOTAL ANNUAL PRODUCTION (gallons)	AVERAGE DAY (gpd)
2010*	39,401,200	107,948
2011	31,194,300	85,464
2012	30,510,700	83,591
2013	29,288,600	80,243
2014	26,418,900	72,381
2015	18,639,800	51,068
3 yr Average	**24,782,433**	**67,897**

*2010 – 2012 data is shown for comparison purposes only and not used in the average values.

Table 3.5 shows decreasing water production since county management of the water utility in 2011. This is primarily due to the repairs of numerous leaky mains and service lines. Compared to 2010, we have reduced production of about 21 MG/yr (=39,401,200-18,639,800 gal) or about 53% of the 2010 water production volume.

TABLE 3.6 – 2011 to 2014 MONTHLY PRODUCTION					
MONTH	2011 (gallons)	2012 (gallons)	2013 (gallons)	2014 (gallons)	2015 (gallons)
December	2,833,700	2,392,500	2,442,500	2,574,300	1,318,300
January	2,905,400	2,348,700	2,567,700	2,387,600	1,558,200
February	2,476,800	2,194,600	2,135,000	2,185,100	1,264,200
March	2,704,200	2,549,000	2,393,200	2,551,100	1,469,800
April	2,913,600	2,300,200	2,297,000	2,446,500	1,400,700
May	2,654,100	2,475,300	2,488,800	2,527,600	1,639,500
June	2,677,700	2,613,200	2,628,700	2,487,300	2,201,800
July	2,697,400	2,809,800	2,840,800	2,791,200	1,982,400
August	2,589,900	2,980,600	2,654,600	1,873,900	1,850,800
September	2,365,800	2,794,900	2,273,400	1,604,700	1,364,900
October	2,201,800	2,685,900	2,305,600	1,603,400	1,257,100
November	2,173,900	2,366,000	2,261,300	1,386,200	1,332,100
TOTAL	**31,194,300**	**30,510,700**	**29,288,600**	**26,418,900**	**18,639,800**

Table 3.7 shows the maximum day versus average day usages for 2011 to 2015, and the resultant peaking factors. This information is derived from daily production records.

TABLE 3.7 – PEAKING FACTOR OF MAXIMUM DAY TO AVERAGE DAY				
YEAR	AVERAGE DAY (gpd)	MAXIMUM DAY (gpd)	MAXIMUM DAY (gpm)	PEAKING FACTOR
2011	85,464	110,300	77	1.3
2012	83,591	114,400	79	1.4
2013	80,243	107,700	75	1.3
2014	72,381	126,200	88	1.7
2015	51,068	131,200	91	2.6
3 yr Average	**74,549**	**117,960**	**82**	**1.7**

3.5.2 Customer Categories, Connections and Consumption

Consumption data is collected bimonthly from service meter readings. The billing categories are residential, commercial and others. The latter category is for approved hydrant withdrawals. Table 3.8 shows the annual consumption by customer classifications for the last three billing years.

TABLE 3.8 – CONSUMPTION BY CUSTOMER CLASSIFICATION								
REVENUE WATER, BILLED AUTHORIZED CONSUMPTION								
YEAR	RESIDENTIAL		COMMERCIAL		OTHERS*		TOTAL	
	(gallons)	%	(gallons)	%	(gallons)	%	(gallons)	%
2011	13,758,059	95.7	613,410	4.2	0	0	14,371,469	100
2012	14,157,392	93.8	525,040	3.5	415,000	2.7	15,097,432	100
2013	13,822,306	94.2	762,699	5.2	95,000	0.6	14,680,005	100
2014	14,688,279	91.6	731,420	4.5	623,045	3.9	16,042,744	100

2015	15,239,952	96	444,089	2.8	198,200	1.2	15,882,241	100%

*Contractor Water Sales/Fire Usage

Table 3.9 shows the number of service connections. Some of the residential connections have no water usage because of either vacancies or our customers' wish to keep a water connection. The majority of the customer base and water usage is residential. There are no large apartment complexes so the use of residential connections is a good direct correlation with the number of households in the service area.

The largest commercial users are the City of Vader wastewater treatment plant and buildings, Little Crane restaurant, local grocery stores, and the Cowlitz-Lewis County Fire District #20 facilities.

TABLE 3.9 – NUMBER OF CONNECTIONS

YEAR	RESIDENTIAL W/ USAGE	RESIDENTIAL W/O USAGE	TOTAL RESIDENTIAL	COMMERCIAL	TOTAL
2011	329	8	337	14	351
2012	338	3	341	14	355
2013	331	9	340	15	355
2014	333	11	344	15	359
2015	336	11	347	14	361

3.5.3 Water Balance and Leakage

A water balance is an accounting of all water that is produced. The Utility's 2015 water balance is shown in Table 3.10. The table is a slightly modified version of the format recommended for use by the American Water Works Association (AWWA).

TABLE 3.10 – 2015 WATER BALANCE

	Level 1	Level 2	Level 3	Volume (gallons)	% of Produced Water
Water Produced	Revenue Water	Billed Authorized Consumption	1. Billed Water Exported	0	0%
			2. Billed Metered Consumption	15,684,041	84.1%
			3. Billed Unmetered Consumption	109,500*	.0.6%
	Non-Revenue Water	Unbilled Authorized Consumption	4. Unbilled Metered Consumption	1,331,400**	7.14%
			5. Unbilled Unmetered Consumption	88,700***	0.5%
		Apparent Losses	6. Unauthorized Consumption	0	0%
			7. Customer Meter Inaccuracies	0	0%
		Real Losses	8. Known Leakage	0	0%
			9. Assumed Leakage	1,426,159	7.65%
TOTAL				18,639,800	100%

* Billed to Lewis County Public Works for water truck usage
** Filter Backwash
*** Fire Usage (estimated on usage based on subtracting firefighting water usage from normalized usage)

The water balance allocates the water produced to different categories at three different levels.

Level 1 allocates the water to either Revenue Water or Non-Revenue Water. As implied by the names, Revenue Water generates income while Non-Revenue water does not. This is helpful to understand how much water production generates income for the Utility and how much non-revenue water production needs to be considered into the demand forecast. The Utility's 2013 water production is divided into 50.1% Revenue Water and 49.9% Non-Revenue Water.

Level 2 splits Non-Revenue Water into three sub-categories which are useful to identify future revenue sources and the magnitude of losses that could be addressed.

- Unbilled Authorized Consumption includes uses such as water system flushing, firefighting, and unbilled contractor use. Typically, it is standard practice not to charge for uses in this category; but it is a good practice to review these uses to ensure a legitimate revenue opportunity is not missed. Losses from repairs are estimated and included in this sub-category.

- Apparent Losses include unauthorized uses and meter inaccuracies which are both lost revenue opportunities.

- Real Losses include various types of system leaks. A certain level of leakage is unavoidable; but leakage beyond that level should be repaired to avoid unduly burdening both the natural resource and the physical infrastructure. Any amount that cannot be assigned to another category is considered a loss under the AWWA's protocol and per the formula for calculating distribution system leakage under the State's Water Use Efficiency Rule.

Level 3 further splits water into additional sub-categories to support further estimation and water management.

Table 3.11 shows a longer history of other water balance elements, namely system distribution leakage and non-revenue water. Non-revenue water loss is defined as the difference between metered source production and authorized usage. Authorized usage includes revenue and non-revenue consumption. Non-revenue water losses can be from leaks, illegal service connections, unbilled service connections, meter inaccuracies, meter reading errors, calculation errors, unreported fire-fighting (hydrant) uses, incomplete closure of valves, and faulty valves and related assemblies.

Table 3.11 lists the non-revenue water losses from 2011 to 2015. The three-year average water loss is about 27%% , however, the water system repaired a long standing leak of approximately 30,000 gallons per day on August 4th, 2014. This is reflected in a large reduction in water loss in

2014 and 2015. The calendar year 2014 water reduction shown in Table 3.11 (19%) only reflects 4 months reduced leakage. When isolating the water system loss for the months of August 2014 – January 2015 the percent loss was calculated to be 8.6%. Graph 3.1 below shows the average daily production for 2013 and 2015. It is clear that that average production rates were significantly reduced following the August 4th repair. Therefore, we believe a conservative projected loss for the system would be 8.6 %, however, we will use a projection of 10% in our future loss calculations. The 2008 WSP reported water losses over 40% and the water loss peaked at 60% in 2010.

TABLE 3.11 – NON-REVENUE WATER LOSS

Year	Metered Source Production	Authorized Consumption			Non-Revenue Water Loss	
		Revenue	Non-Revenue	Total		
	(gallons)	(gallons)	(gallons)	(gallons)	(gallons)	(%)
*2010**	*39,401,200*	*15,691,595*	*N/A*	*15,691,595*	*23,709,605*	*60*
2011	31,194,300	14,371,469	780,000	15,151,469	16,042,831	51
2012	30,510,700	15,097,432	86,420	15,183,852	15,326,848	50
2013	29,288,600	14,680,005	2,145,557	16,825,562	12,463,038	43
2014	26,418,900	16,042,744	2,525,595	18,568,339	7,850,561	30
2015	18,639,800	15,793,541	1,420,100	17,213,641	1,426,159	7.65
2013-2015 AVERAGE	**24,782,433**	**15,505,430**	**2,954,104**	**18,459,534**	**6,322,899**	**26.9**

*2010 water loss is based on metered production and metered revenue from City records.

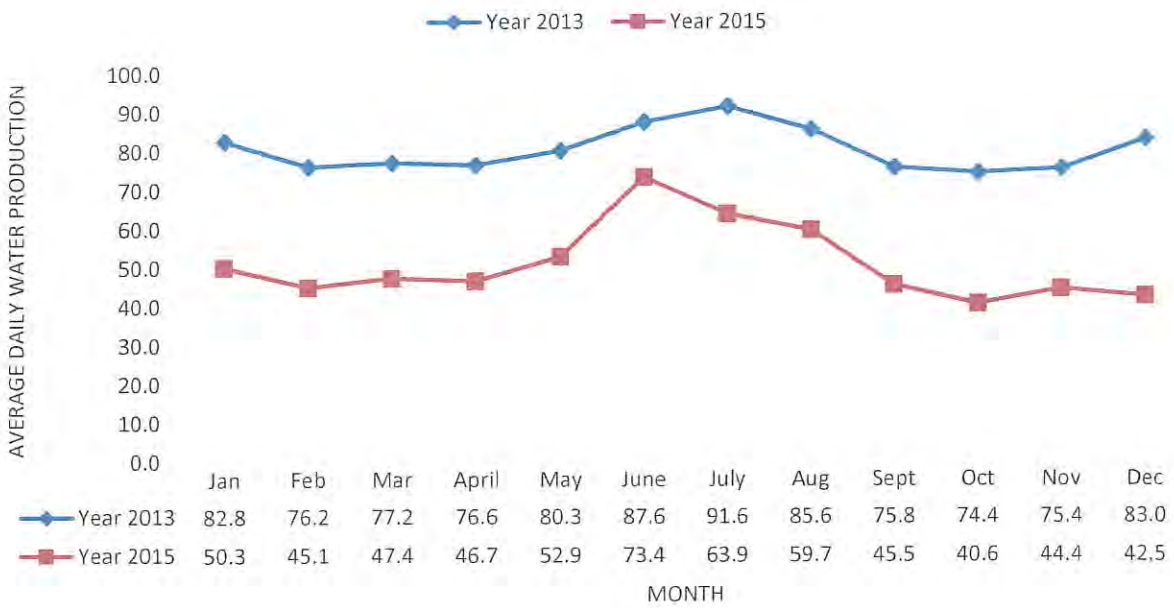

WSDOH adopted the Water use Efficiency Rule under WAC 246-290-490 in September 2006 as part of the 2003 Municipal Water Law. The new rule set a maximum leakage standard of 10% in the distribution system of all Municipal Water Suppliers, and annual compliance with the leakage standard by 2011 for Municipal Water Suppliers with less than 1,000 connections. Since August 4th 2014 water main repair, the Vader-Enchanted Valley Water System has had a water loss of less than 10%. However, because the 3-year average system water losses exceed 10%, a water loss action plan has been developed to implement measures to reduce non-revenue water losses. The water loss action plan is in Appendix E.

3.5.4 Water Use Factors and Equivalent Residential Units (ERU)

The use of Equivalent Residential Unit (ERU) is a means to express all water use by non-residential customers. An ERU is a system-specific unit of measure to express the average consumption by one single-family residence. An ERU value for one system is not the same for another water system.

The value of an ERU is calculated by dividing the total volume of water for the residential customer class by the total number of **residential connections with usage**. Some water connections or active accounts have no water usage. ERU water demand is calculated using the residential consumption volume divided by the number of residential water connections with water usage. Water use by other customer classes and residential customers with no water usage can then be converted to a corresponding number of ERUs. Table 3.12 shows the historical ERU values from 2011 to 2015. Information about customer connections is provided in Table 3.8.

The four-year average is 118 gpd per ERU. However, due to the replacement of all of the residential meters in the system, an ERU value of 124 gpd, will be used in our calculations which reflects the more accurate ERU demand in 2015.

TABLE 3.12 – ERU ANALYSIS				
YEAR	RESIDENTIAL CONSUMPTION (gallons)	RESIDENTIAL CONSUMPTION (gpd)	#RESIDENTIAL CONNECTIONS w/ USAGE	ERU WATER DEMAND (gpd)
2011	13,758,059	37,693	329	115
2012	14,157,392	38,787	338	115
2013	13,822,306	37,869	331	114
2014	14,688,279	40,242	331	121
2015	15,239,952	41,753	336	124
ERU Water Demand				≈124

Table 3.13 shows the ERUs for all customer classes using the billed, authorized consumption in Table 3.8. Although the 2011-2015 average ERU water demand is 118 gallons per day, we will use a more conservative ERU water demand of 124 gpd. This rate is appropriate because all meters were replaced as a part of a CDBG/DWSRF funded capital improvement project, which likely contributed to the increase in ERU demand as many of the old meters did not register very low flows. Information about water consumption by customer classification is provided in Table 3.8, and about non-revenue water losses in Table 3.10. The system serves an averaged total of 694 ERUs.

TABLE 3.13 – ERU BY CUSTOMER CLASSIFICATION					
Year	#RESIDENTIAL ERU (1)	#COMMERCIAL ERU (2)	#OTHER AUTHORIZED ERU (3)	#NON-REVENUE ERU (4)	#TOTAL ERU
2011	337	14	18	379	748
2012	341	12	2	362	717
2013	340	17	51	294	703
2014	344	16	125	120	606
2015	347	10	31	32	420
AVERAGE	**347**	**14**	**46**	**238**	**639**

1) From Table 3.9, column 4.
2) From Table 3.8, column 4 divided by the ERU value of 124 gpd.
3) From Table 3.11, column 4 divided by the ERU value of 124 gpd.
4) From Table 3.11, column 6 divided by the ERU value of 124 gpd.

3.6 WATER DEMAND FORECAST

3.6.1 Demand Forecast Methodology

The methodology used to develop the demand forecast is outlined in this section. The forecast uses two time horizons (6-year and 20-year).

The forecast also factors in an industrial customer classification based on an industrial land use and zoning in the service area. The City of Vader approved a 28.74 acre area for industrial use and zoning in 2010. Although there has been no City issued development approvals or application for water service, our forecast includes an industrial water use category.

At this time, there is an automobile wrecking facility (German Auto) located in one of the four industrial zoned parcels. The proposed water demand for the automobile wrecking facility is 2 ERU. Recent news in January 2014 state the owner of German Auto is also interested in constructing medicinal marijuana growing and retail facilities on the four parcels. However, there have been no projections of water demand and water service applications provided to the Utility so no speculative demand projections are included in this WSP. According to Utility policy, an amendment to this WSP will be required and funded by future developers once a proposed project is approved by State and local regulatory agencies.

The process used to develop the demand forecast is described as the following steps in this section.

1. DEMOGRAPHICS – Demographics were developed as described in Section 3.4.

2. WATER USE FACTORS – Water use factors were developed as described in Section 3.5.

3. RETAIL DEMAND – The demand for residential and non-residential customer categories were made by multiplying the demographic projections in Step 1 with Step 2.

4. NON-REVENUE DEMAND – The sum of all demands was multiplied by the 2015 "non-revenue water, losses" percentage which is 7.65% of the authorized consumption as shown in Table 3.10.

   = 1,426,159 gal / (15,684,041+109,500+1,331,400+88,700+1,426,159) gal
   = 1,426,159 gal/18,639,800 gal
   = 0.765 x 100
   = 7.65%

5. TOTAL AVERAGE DAY DEMAND (ADD) – The ADD was calculated by adding the demands from Steps 1 through 4.

6. TOTAL MAXIMUM DAY DEMAND (MDD) – The MDD was derived from the water usage reports, adjusting for 2 anomolies (July 1, 2015 113,100 gpd and July 8, 2015 131,200 gpd). The MDD used is determined from water usage on June 26, 2015 = **96,500 gpd** for 420 ERUs therefore MDD = 230 gpd/ERU with a Peaking Factor of **1.85**.

7. PEAK HOUR DEMAND (PHD) – The PHD was derived by using the equation in the WSDOH Water System Design Manual, December 2009. The equation is:

   $$PHD = (MDD/1440)(C*N+F) + 18$$

Where, MDD = MDD in gpd/ERU
N = number of ERUs
C = 1.8 for N=251-550 & 1.6 for N>500
F = 225

8. CONSERVATION ADJUSTMENT – Steps 1 through 6 create a baseline demand forecast which is adjusted for conservation efforts by customers. Prior conservation goals were to reduce water loss to 10% by 2025 and to reduce average daily consumption per capita by 1 gallon.

   We have achieved the water loss goal, but the apparent consumption per day has risen due to the replacement of the residential meters. However, the ERU Demand of 124 gallons per day is still a relatively low ERU rate.

3.6.2 Water Demand Projections

The projected demands are summarized in Table 3.14.

TABLE 3.14 – WATER DEMAND FORECAST												
WATER USE CATEGORY	BASE (2015)				6-YEAR (2021)				20-YEAR (2035)			
	#ERU	DEMAND (gpd)		PHD	#ERU	DEMAND (gpd)		PHD	#ERU	DEMAND (gpd)		PHD
		ADD	MDD			ADD	MDD			ADD	MDD	
Residential	347	43,028	79,810	-	402	49,848	92,460	-	569	70,556	130,870	-
Commercial	10	1,240	2,300	-	19	2,356	4,370	-	24	2,976	5,520	-
Industrial	0	0	0	-	0	0	0	-	0	0	0	-
Other Authorized Use	32	3,968	7,360	-	32	3,968	7,360	-	32	3,968	7,360	-
Subtotal	389	48,236	89,470	-	453	56,172	104,190	-	625	77,500	143,750	-
System Leakage	31	3,844	7,130	-	50	6,200	11,500	-	69	8,556	15,870	-
TOTAL DEMAND WITHOUT CONSERVATION	**420**	**52,080**	**96,600**	**175 gpm**	**503**	**62,372**	**115,690**	**182* gpm**	**694**	**86,056**	**159,620**	**231* gpm**

ERU = 124 gpd/residential customer
* - Used C = 1.6

4. SYSTEM ANALYSIS

4.1 WATER RIGHTS ANALYSIS

The Utility has one water right for surface water diversion from the Cowlitz River for municipal use. Maximum instantaneous flow is 0.50 cubic feet per second (cfs) or about 224 gallons per minute (gpm). A maximum annual volume is not specified.

The water right is Surface Water Certificate No. 9616. The original priority date is November 9, 1961; but the point of withdrawal along the Cowlitz River was slightly changed in 1972 and the priority date changed to November 21, 1972. Water rights issued in the 1960s and 1970s commonly did not include an annual withdrawal amount. Copies of the water right documents are in Appendix C.

Table 4.1 compares the existing water rights with the existing capacity of the system. The source capacity considered the limiting factors of the river pump (225 gpm), raw water pump station (one pump at 190 gpm and two pumps running produce 225 gpm), , and water treatment plant (two 100 gpm treatment units). The source capacity was determined to be 200 gpm. Table 4.1 shows that the system is operating within their water right.

TABLE 4.1 – WATER RIGHTS SUMMARY

Source	Certificate	Instantaneous Withdrawal		
		Water Right (gpm)	Existing Capacity (gpm)	Surplus (+) or Deficit (-) (gpm)
Cowlitz River	9616	224	200	24

Tables 4.2 through 4.4 show the status of existing, forecasted 6-year and forecasted 20-year water rights. The tables show that the water right is not the limiting factor for system operation and growth.

Washington State Department of Health
Division of Environmental Health
Office of Drinking Water

TABLE 4.2 - Project Report Form
Water Rights Self Assessment – Existing Water Right Status

Permit Certificate or Claim #	Name of rightholder or claimant	Priority Date	Source Name/Number	Primary or supplemental	Existing System Capacity - based on water right limits		Projects Production/withdrawal with New Project On-line		Projected System Capacity Status (excess or deficiency of water rights)	
					Maximum Instantaneous Flow rate (Qi)	Maximum Annual Volume (Qi)	Maximum Instantaneous Flow Rate (Qi)	Maximum Annual Volume (Qa)	Maximum Instantaneous Flow Rate (Qi)	Maximum Annual Volume (Qa)
Certificate No. 9616	Town of Vader	11/21/72	Cowlitz River	Primary	224 gpm	N/A	200 gpm	N/A	24 gpm	N/A
Claims 1.										
2.										
3.										
4.										
Total										

Intertie Name/Identifier	Name of Purveyor Providing Water	Existing Limits on Intertie Water Use		Projected Production/Withdrawal with New Project On-line		Current Intertie Supply Status (Excess/Deficiency)	
		Maximum Instantaneous Flow rate (Qi)	Maximum Annual Volume (Qa)	Maximum Instantaneous Flow rate (Qi)	Maximum Annual Volume (Qa)	Maximum Instantaneous Flow Rate (qi)	Maximum Annual Volume (Qa)
1.							
2.							
3.							
4.							
TOTAL **********	****** ********** **********						

Washington State Department of Health
Division of Environmental Health
Office of Drinking Water

TABLE 4.3 - Project Report Form
Water Rights Self Assessment – Forecasted 6-Year Water Right Status

Permit Certificate or Claim #	Name of rightholder or claimant	Priority Date	Source Name/Number	Primary or supplemental	Existing System Capacity - based on water right limits		Projects Production/withdrawal with New Project On-line		Projected System Capacity Status (excess or deficiency of water rights)	
					Maximum Instantaneous Flow rate (Qi)	Maximum Annual Volume (Qi)	Maximum Instantaneous Flow Rate (Qi)	Maximum Annual Volume (Qa)	Maximum Instantaneous Flow Rate (Qi)	Maximum Annual Volume (Qa)
Certificate No. 9616	Town of Vader	11/21/72	Cowlitz River	Primary	224 gpm	N/A	200 gpm	N/A	24 gpm	N/A
Claims 1.										
2.										
3.										
4.										
Total										

Intertie Name/Identifier	Name of Purveyor Providing Water	Existing Limits on Intertie Water Use		Projected Production/Withdrawal with New Project On-line		Current Intertie Supply Status (Excess/Deficiency)	
		Maximum Instantaneous Flow rate (Qi)	Maximum Annual Volume (Qa)	Maximum Instantaneous Flow rate (Qi)	Maximum Annual Volume (Qa)	Maximum Instantaneous Flow Rate (qi)	Maximum Annual Volume (Qa)
1.							
2.							
3.							
4.							
TOTAL **********	****** ********** **********						

Washington State Department of Health
Division of Environmental Health
Office of Drinking Water

TABLE 4.4 - Project Report Form
Water Rights Self Assessment – Forecasted 20-Year Water Right Status

Permit Certificate or Claim #	Name of rightholder or claimant	Priority Date	Source Name/Number	Primary or supplemental	Existing System Capacity - based on water right limits		Projects Production/withdrawal with New Project On-line		Projected System Capacity Status (excess or deficiency of water rights)	
					Maximum Instantaneous Flow rate (Qi)	Maximum Annual Volume (Qi)	Maximum Instantaneous Flow Rate (Qi)	Maximum Annual Volume (Qa)	Maximum Instantaneous Flow Rate (Qi)	Maximum Annual Volume (Qa)
Certificate No. 9616	Town of Vader	11/21/72	Cowlitz River	Primary	224 gpm	N/A	220 gpm	N/A	24 gpm	N/A
Claims 1.										
2.										
3.										
4.										
Total										

Intertie Name/Identifier	Name of Purveyor Providing Water	Existing Limits on Intertie Water Use		Projected Production/Withdrawal with New Project On-line		Current Intertie Supply Status (Excess/Deficiency)	
		Maximum Instantaneous Flow rate (Qi)	Maximum Annual Volume (Qa)	Maximum Instantaneous Flow rate (Qi)	Maximum Annual Volume (Qa)	Maximum Instantaneous Flow Rate (qi)	Maximum Annual Volume (Qa)
1.							
2.							
3.							
4.							
TOTAL **********	****** ********** **********						

4.2 SOURCE CAPACITY

The water system receives water from a single surface water source, the Cowlitz River. DOH requires source production capacity to be equal to meet Maximum Day Demands (MDD). And the water rights must be sufficient to meet MDD and Average Day Demands (ADD). Since the source capacity of 200 gpm is less than the water right of 224 gpm, the source analysis will make comparisons to the source capacity at an 18-hour production day. Table 4.5 compares current and projected MDD and ADD values with the source capacity. The source capacity can adequately handle demands in the two planning horizons.

TABLE 4.5 – 18 HOUR SOURCE PRODUCTION CAPACITY ANALYSIS			
CATEGORY	BASE (2015)	6-YEAR (2021)	20-YEAR (2035)
Without Conservation (Table 3.14)			
Projected ERU and Demands			
ERU	420	503	694
ADD (gpd)	52,080	62,372	86,056
MDD (gpd)	96,600	115,690	159,620
Existing Source Capacity (gpd)	216,000	216,000	216,000
Source Surplus(+)/Deficiency (-) (gpd)	**+119,400**	**+100,310**	**+56,380**

Limiting Factor Determination Source Capacity Average Daily Demand

$N=V_a/(365*ADD) = 216,000$ gpd/124 = 1742 ERUs

Limiting Factor Determination Source Capacity Maximum Daily Demand

$N=V_d/MDD = 216,000/230$ gpd/ERU = 939 ERUs

4.3 STORAGE CAPACITY

Existing Effective Storage

The effective storage capacity in the reservoir is the volume available of being withdrawn at the rates and pressures required for water storage purposes. Generally, the effective storage is equal to the total storage minus operational and dead storage.

Table 4.6 summarizes the characteristics of the steel reservoir.

TABLE 4.6 – RESERVOIR CHARACTERISTICS	
Characteristic	Value
Nominal Capacity	250,000 gallons
Diameter	55 ft

Unit Volume	17,772 gal/ft
Overflow Elevation	328 ft
Source Call Elevation	326.5 ft
Minimum Operating Elevation	316 ft
Outlet Elevation	315 ft
Base Elevation	315 ft
Effective Storage Depth	10.5 ft
Effective Storage Volume	186,510≈186,500

The Total Storage (TS) is the volume between the base and overflow elevations. This volume is about 230,910 gallons.

$$TS = \pi \times 55^2/4 \times (328 \text{ ft} - 315 \text{ ft}) \times 7.48 \text{ gal/cf} = 230{,}908 \text{ gal} \approx 230{,}910 \text{ gallons}$$

The Operational Storage (OS) is the volume between the low and high water storage elevations set to control system pumps. This volume is about 26,640 gallons.

$$OS = \pi \times 55^2/4 \times (328 \text{ ft} - 326.5 \text{ ft}) \times 7.48 \text{ gal/cf} = 26{,}643 \text{ gal} \approx 26{,}640 \text{ gallons}$$

Dead Storage (DS) is the last foot of water in the reservoir because the reservoir should not be drawn down within a foot of the outlet pipe elevation. This volume is about 17,760 gallons.

$$DS = \pi \times 55^2/4 \times (1 \text{ ft}) \times 7.48 \text{ gal/cf} = 17{,}762 \text{ gal} \approx 17{,}760 \text{ gallons}$$

The Effective Storage is (ES) Total Storage minus Operational Storage and Dead Storage. This volume is about 185,790 gallons.

$$ES = TS - OS - DS = 230{,}910 - 26{,}640 - 17{,}760 = 186{,}510 \text{ gallons.}$$

The system has an additional 24,220 gallons available from the clearwell. The clearwell is a 61,650 gallon (29 ft x 20.33 ft x 14 ft) concrete reservoir beneath the treatment plant that is used as a clearwell to provide adequate contact time. The remaining 37,433 gallons is needed to provide adequate chlorine contact time. If needed, about 24,220 gallons of additional storage is available in the clearwell.

This brings the total available storage to 186,510 + 24,220 gallons=**210,730 gallons**

Equalizing Storage

Equalizing storage is typically used to meet diurnal demands that exceed the average daily and peak day demands. The volume of equalizing storage required depends on peak system demands, the magnitude of diurnal water system demand variations, the source production rate, and the mode of system operation. Sufficient equalizing storage must be provided in combination with available water sources and pumping facilities such that peak system demands can be satisfied.

Equalizing storage is calculated using the following equation from Table 9-1 of the DOH Water System Design Manual:

VES = (PHD – QS) x 150 minutes

Where VES = Equalizing Storage component (gallons)
PHD = Peak Hourly Demand (gpm)
QS = Total Source of Supply Capacity, excluding emergency sources (gpm) = 200 gpm.

Equalizing storage is zero because the peak hour demand is less than the source capacity of 200 gpm for all but the projected water demand for the 20 year forecast. For forecast year 20, VES = (231 gpm – 200 gpm) * 150 = 4,650 gallons.

Standby Storage

Standby storage is provided to meet demands in case of a system failure such as a power outage, an interruption of supply or a break in the major transmission line. The amount of emergency storage should be based on the reliability of supply and pumping equipment, standby power sources, and the anticipated out of service length of time.

Standby storage is calculated using the following equation from Table 9-1 of the DOH Water System Design Manual:

VBS = 2 days x ADD X N

Where VBS = Total standby storage component (gallons)
ADD = Average daily demand per ERU (gpd/ERU)
N = Number of ERUs.

Table 4.7 lists the standby storage volumes for existing and the two projected planning horizons.

Fire Suppression Storage

Fire suppression storage is provided to ensure that the volume of water required for firefighting is available. Fire suppression storage also reduces the impact of firefighting on distribution water system. The amount of water required for firefighting purposes is specified in terms of rate of flow in gpm and an associated duration. Fire flows must be provided at a residual water system pressure of at least 20 psi.

Fire suppression storage is calculated using the following equation 9-4 of the DOH Water System Design Manual:

FSS = FF x T
= 750 gpm x 30 minutes = 22,500 gallons

Where FSS = Fire suppression storage

FF = Required fire flow rate (gpm) as specified by local fire protection authority or under WAC 246-293-640 whichever is greater.
T = Duration (minutes)

Storage Capacity Analysis

Table 4.7 lists the equalizing and standby storage volumes for existing and the two projected planning horizons (6-year, 20-year). The projected demands and ERU values are from Table 3.14. The values with no conservation are used.

TABLE 4.7 – PROJECTED STORAGE CAPACITY REQUIREMENTS				
CAPACITIES	2015 (gallons)	2021 (gallons)	2035 (gallons)	Limiting Factor Determination
ERU	420	503	694	730
EQUALIZING STORAGE	0	0	4,650	6000
STANDBY STORAGE	104,160	124,744	172,112	181,040
FIRE SUPPRESSION	22,500	22,500	22,500	22,500
TOTAL	**130,960**	**138,710**	**199,262**	**209,540**
EFFECTIVE STORAGE	210,730	210,730	210,730	210,730
AVAILABILITY/DEFICIT	**+79,770**	**+72,020**	**+11,468**	

The storage capacity can meet the projected 6-year and 20-year planning horizons. The projected water demands used a loss value of 10% as derived from the water balance analysis using data outlined in Table 3.10 and projecting the reduced loss based on the major repair of August 4, 2014. If non-revenue losses can be further reduced, the storage capacity can have increased availability.

Maximum ERUs based on Capacity Related Storage ~ 730 ERUs

4.4 DISTRIBUTION SYSTEM ANALYSIS

4.4.1 Hydraulic Modeling

As required by DOH, the water system was analyzed using a computer hydraulic model. The distribution system was analyzed and deficiencies were identified for two conditions: peak hour demands (PHD) and maximum day demands (MDD) plus fire flow. All modeling calculations were performed using EPANET.

Hydraulic models require a configuration of the system and assignment of specific system elements such as pipes, nodes and reservoirs. The system was modeled as 65 nodes, 85 pipes and 1 tank. The system has no operable PRV. A schematic map of the system is in Appendix D.

The layout of the water system was recreated in the computer model using an updated system map. This system map was developed by the Utility in 2010 using as-built plans, field

investigations, operator lore, and the 2008 WSP. The system map was updated in 2013 to include the water system improvements made by the Utility in 2012.

Chapter 3 presents information on water demands for the existing system and for two planning horizons (2020, 2034). For the model, the demand forecast shown in Table 3.14 under the "without conservation" was used to determine the demand in the service area.

4.4.2 Demand Allocation

Demand allocation was determined by the number and type of services at a specific node. The number of customers and type of service customer were assigned at either the nearest or downstream node of the particular water main segment. The spatial distribution of demand was allocated across every node with the exception of nodes that were located on a transmission main, and near the tank. The total number of customers were then totaled and compared to the number of active and inactive service connections. There are about 402 available water service connections as confirmed by the presence of existing service meter boxes.

After the existing demand allocation was conducted, it was used as the basis for the allocation of the two planning horizons: 6-year (2020); and 20-year (2034). Future non-residential demands at specific nodes in the non-residential land use zones were adjusted. Future residential demands were adjusted using a multiplier of 1.1 (=370/341) and 1.3 (=437/341) for 2020 and 2034, respectively. The derivation of the multiplier is based on the projected number of residential ERU with 341, the existing number of residential ERU.

The water demand values shown in Table 3.14 were then used to compute the demand at each junction node. The demand used is the total demand which is the sum of authorized consumption and non-revenue water loss.

4.4.3 Model Calibration

The calibration of a hydraulic model provides a measure of assurance that the model is accurate and representative of the actual system. The model was calibrated using field data from fire hydrant tests obtained at various locations in the system. Readings of static pressures, fire flows and residual pressures were taken on June 5, 2014. The system conditions at the time of each test were recorded. The tank water level was full at the time of hydrant testing. Table 4.8 summarizes the test locations and associated node numbers.

TABLE 4.8 - HYDRANT TEST READINGS

TEST #	NODE #	LOCATION
1A	59	9th/E St
1B	86	9th/G St
2A	76	10th/A St
2B	75	10th/B St
3A	29	6th/Annonen
3B	25	6th/Main
4	85	8th/I St
5A	111	EVD/Spring Ct
5B	109	EVCC

Using the system conditions for each hydrant test, the hydraulic model was used to generate static and residual pressures at the measured hydrant flow rates. The total system demand at the time of the hydrant tests was assumed to be the average day demand for 2013 with a full reservoir. Static pressure readings were compared to model output from this simulation. Residual pressure readings were compared to model output from placing an added demand at the test hydrant locale equal to the field measured hydrant flow rate.

The field results were then compared to the model simulations described above. System pressures and water flow rates are dependent upon the friction loss characteristics for each pipe. These characteristics in the model are set by model parameters such as pipe type, roughness coefficients, pipe lengths and elevations. These parameters were adjusted through an iterative process until the model output approximated the field measured data. The model output was compared with the field measurements for static pressure and residual pressure. The comparison is summarized in Table 4.9.

TABLE 4.9 – MODEL CALIBRATION RESULTS								
TEST #	NODE #	FLOW (gpm)	STATIC PRESSURE (gpm)			RESIDUAL PRESSURE (gpm)		
			FIELD	MODEL	DIFFERENCE	FIELD	MODEL	DIFFERENCE
1A	59		54	50	4	-	-	-
1B	86		52	49	3	-	-	-
1B, Fire	86	1000	-	-	-	40	45	5
2A	76		82	78	4	-	-	-
2B	75		70	71	1	-	-	-
2B, Fire	75	1250	-	-	-	62	66	4
3A	29		84	81	3			
3B	25		70	72	2			
3B, Fire	25	1200	-	-	-	62	67	5
4	85	-	44	42	2	-	-	-
5A	111		50	47	3			
5B	109		50	46	4			

Hydraulic models are required to be within 5 psi of measured pressure readings for long range planning according to the DOH Design Manual, Table 8-1. Calibration of the model produced results within 4 psi of the field data for static pressure, and within 5 psi of the field data for residual pressure. Detailed analyses of the model input and calibration simulations are in Appendix D.

4.4.4 Model Scenarios

After calibration of the model, hydraulic analyses were made for six scenarios. The scenarios are listed in Table 4.10.

TABLE 4.10 – MODELING SCENARIOS		
DESCRIPTION	DEMAND	PURPOSE
Existing, Peak Hour	2014 PHD	Evaluate system
Existing, Fire Flow	2014 MDD plus fire flow	Evaluate system

Plan Year 6 (2020), Peak Hour	2020 PHD	Evaluate system performance and develop CIP for Plan Year 6 peak hour conditions
Plan Year 6 (2020), Fire Flow	2020 MDD plus fire flow	Evaluate system performance and develop CIP for Plan Year 6 fire flow conditions
Plan Year 20 (2034), Peak Hour	2034 PHD	Evaluate system performance and develop CIP for Plan Year 20 peak hour conditions
Plan Year 20 (2034), Fire Flow	2034 MDD plus fire flow	Evaluate system performance and develop CIP for Plan Year 20 fire flow conditions

4.4.5 Peak Hour Demand Results

In accordance with WAC 246-290-230, a minimum pressure of 30 psi must be maintained at all customer connections under PHD conditions. The system was modeled under existing, 2020 and 2034 peak hour demand conditions. The pressures from these scenarios are in Appendix D. The system is capable of meeting the minimum pressure requirements.

4.4.6 Fire Flow Analysis Results

A minimum of 20 psi must be maintained for fire flows under MDD conditions. Minimum fire flows were obtained from WAC 246-293-640 and confirmed by the Lewis County Fire Marshall as being the minimum standard for Lewis County in this area. Although the existing customer base is primarily residential, the City of Vader has some lands designated as commercial so fire flows of 750 gpm were used. Table 4.11 shows fire flows at all of the hydrant locations in the system. The system is able to meet fire flows for the 6-year and 20-year planning horizons.

To meet higher fire flows in the EVCC area, the small 2-inch and 4-inch mains must be replaced with larger piping.

TABLE 4.11 – AVAILABLE FIRE FLOW

NODE #	HYDRANT LOCATION	FIRE FLOW GOAL (gpm)	AVAILABLE FIRE FLOW (gpm)		
			2014	2020	2034
4	6th/G St	750	2600	2600	2600
12	6th/D St	750	2200	2200	2200
19	6th/B St	750	2200	2200	2200
22	5th/A St	750	2200	2200	2200
25	6th/Main	750	2200	2200	2200
29	6th/Annonen	750	2200	2200	2200
30	7th/Annonen	750	2200	2200	2200
32	SR506/Winlock Vader Rd	750	1000	1000	1000
35	7th/A St	750	2200	2200	2200
37	7th/B St	750	2200	2200	2200
39	7th/E St	750	2200	2200	2200
43	8th/E Alley	750	2100	2100	2100

45	8th/C St	750	2100	2100	2100
50	9th/A Alley	750	2100	2100	2100
54	9th/B St	750	2100	2100	2100
59	9th/E St	750	2100	2100	2100
68	9th/G St	750	2000	2000	2000
69	10th/F St	750	2100	2100	2100
70	10th/E St	750	2100	2100	2100
72	10th/D St	750	2100	2100	2100
75	10th/B St	750	2100	2100	2100
76	10th/A St	750	2100	2100	2100
85	8th/I St	750	1800	1800	1800
86	9th/G St	750	1900	1900	1900
109	Enchanted Valley Country Club (EVCC)	750	750	750	750
111	EVD N/Spring Ct	750	1000	1000	1000

4.5 SUMMARY OF SYSTEM CAPACITIES

The capacity of the system is defined by the limiting capacities of several system elements. These elements are summarized in the Table 4.12.

TABLE 4.12 – WATER FACILITY CAPACITIES	
FACILITY	CAPACITY
Source @ 18 hour Pump Rate	216,000 gpd
Source @ 24 hour Pump Rate	288,000 gpd
Water Rights, Qi	224 gpm
Intake Pumping Capacity	225 gpm
Treatment Plant	200 gpm
Storage from Tank and Clearwell	210,730 gallons (=186,510 tank + 24,220 clearwell)

A comparison was made between the facility capacities and the forecasted water demands provided in Table 3.14. For brevity, the forecasted water demands with no water conservation are provided in Table 4.13 since conservation measures would reduce projected water demands.

TABLE 4.13 – WATER DEMAND WITH NO CONSERVATION				
SCENARIO	ERU	WATER DEMAND WITH NO CONSERVATION		
		ADD	MDD	PHD
BASE (2015)	420	52,080 gpd	96,600 gpd	175 gpm
6-YEAR (2021)	503	62,372 gpd	115,690 gpd	182 gpm
20-YEAR (2035)	694	86,056 gpd	159,620 gpd	231gpm

The analysis shows that the system has the facility capacity to meet projected demands. This adequacy is based on the following assumptions:

- Continuation of the water loss rate as outlined in Table 3.11 (10%) and used in forecasted demands in Table 3.14.
- No significant change in the number and usage habits of residential customers
- No expanded change in water usage from primarily residential to industrial and commercial.
- No change in the ERU factor of 124 gpd/ERU.

Although the water loss at this time appears to be sustainable below the 10% target threshold, the 3-year average is 27%, therefore, a water use efficiency program is outlined in Chapter 5 to further reduce non-revenue water loss to comply with DOH regulations and in the event water loss increases. In either scenario, the System can adequately meet future demands.

Water main improvement projects are outlined in Chapter 9 and were analyzed with the hydraulic model. A discussion of the priority assessment and of the utility's philosophy of individual capital improvement projects is provided in Chapter 9.

TABLE 4.14 Limiting Factor Determination of System Capacity ERU			
Source/Production Limit	216,000 gpd	230 gpd/ERU (MDD)	939 ERU
Capacity Related Storage Limit	ES+SB+FSS = 209,540	Eff. Storage = 210,730	730 ERU
System Limit	i.e. PHD produces < 30 psi		>1000 ERU
Water Right Limit	224 gpm	230 gpd/ERU	1402
Service Area Limit	Density based on Zoning	Figure 3.1	>2,500
20-Year Planning Horizon			**694 ERU**

TABLE 4.15 CURRENT WATER SYSTEM STATUS	
Current ERUs	**420**
ADD	124 gpd/ERU
MDD	230 gpd/ERU
Current PHD	175 gpm

Therefore, the limiting factor (other than the Planning Horizon is the Capacity Related Storage limit of 730 ERUs. Since this is above the 20 year planning horizon estimate of 694 ERUs:

As shown in Table 3.14, Lewis County is requesting approval for a total of *593 connections* which, when taking projected water loss (10%) and authorized non-billed use into account translates to a total of 694 ERUs for the water system.

Appendix D shows the Hydraulic Analyses that were run for four different scenarios using EPANET.

Scenario 1 – ADD Demand of 54,233 gpd to show model calibration.
Scenario 2a - 2035 PHD – Nodes – This analysis shows that the system supports the 2035 Peak Hourly Demand of 231 gpm with only one node going below 30 psi. However that node is only a junction node in the software and there are no services off of that node. It does however illustrate that that the system cannot support development at a service elevation greater than elevation 258 and maintain minimum pressure of 30 psi.
Scenario 2b - 2035 PHD – Links – this report shows that there is no excessive velocity or head loss in any current pipe under 2035 PHD flows
Scenario 3 – Sets the demand multiplier to 0.01 (0 was not allowed by the software) which simulates the pressure in the system under static conditions – this scenario shows that the system pressures get above 80 psi in 2 main areas, downstream of Node 116 and Upstream of Node 107. These improvements have been put into the Capital Improvement Plan
Scenario 4 – System at 1000 ERUs – 315 gpm

VADER WATER SYSTEM CAPACITY

City and UGA

	Land Area				Allowed Density under Code				Potential Dwelling Units under Zoning[1]	
Zone	City	UGA	Total	Estimate Developed[2]	Minimum Density	Minimum Lot Size	Maximum Density	Housing Type for Maximum	Minimum	Maximum
CM	35.6	85.0	120.6		Residential Allowed Subject to standards of R2 and R3 zone. Commercial Anticipated				-	-
CS	27.9	19.4	47.4		Overlay zone. R1 zone typically underlying zone, so standards of R1 apply if the use is not a community facility				-	-
I	31.0		31.0		No residential allowed				-	-
R1	480.7	185.1	665.8	140.0	4	9,000	4.84	SFR	1,577.3	1,908.6
R2		97.2	97.2	45.0	4	9,000 (SFR) 12,000 (Duplex)	7.26	Duplex	156.4	283.9
R3	17.1	3.5	20.5	0.0	4	9,000 (SFR) 12,000 (Duplex) 17,000 (Eight Plex)	20.5	Eight Plex	61.6	315.5
Total	592.3	390.2	982.4	185.0					1,795.3	2,508.0

Rural County

RRD 1-5			173.3	140.0	0	5 Acres	0.2	SFR	-	5.0

[1]Assumes that Roads and Open Space will take up 25 percent of the site

[2]Calculated assuming that parcels within the City and UGA that were an acre or less in size and had a residential use were "developed"

5. WATER USE EFFICIENCY PROGRAM

This chapter summarizes the Utility's current and proposed actions to comply with conservation planning requirements and to promote water efficiency. The discussion of current actions includes an assessment of the Utility's compliance for the period between 2011 through 2014.

5.1 WATER USE EFFICIENCY PROGRAM

Water is a limited resource. Drinking water competes with other uses such as agriculture, industry, recreation and habitat requirements so the implementation of water efficiency programs by public water systems help ensure a safe and reliable supply of drinking water.

Water conservation also helps prevent potential health and sanitation risks. Water conservation is defined to be any beneficial reduction in water losses, waste and use. These beneficial reductions in turn will contribute to long-term reliability of our water supply, prevent public health risks, and offer cost savings by protection against:

- Temporary water service interruptions during peak usage.
- Long-term or repeated water disruptions due to limited water supply.
- Contamination of the water supply due to leaky pipes.

Other benefits of water conservation are associated with efficiency. By reducing the amount of treated water, water systems can reduce energy use, amounts of treatment materials and other associated operation costs.

5.2 COMPLIANCE WITH WUE REQUIREMENTS

The conservation planning requirements that must be addressed in water system plans are contained in the following information sources:

- State of Washington Water Use Efficiency Rule (January 2007)
- DOH Water Use Efficiency Guidebook (January 2011)

There are seven categories of requirements: 1) meters; 2) data collection; 3) demand forecast; 4) efficiency program; 5) distribution system leakage; 6) goals; and 7) performance reports. Table 5.1 summarizes the requirements and shows Lewis County is in compliance with these requirements.

TABLE 5.1 – COMPLIANCE WITH WATER USE EFFICIENCY RULE REQUIREMENTS		
CATEGORY	REQUIREMENT	LEWIS COUNTY COMPLIANCE STATUS
Meters	1. Meter all sources.	Yes, all sources are metered.
	2. Meter all service connections.	Yes, all service connections are metered.
Data Collection	1. Provide annual consumption.	Yes, provided in Section 3.5.4.
	2. Provide annual total for each customer class.	
	3. Water supply characteristics.	Yes, provided in Section 2.5.4 and Chapter 6.
Demand Forecasting	1. Population	Yes, provided in Section 3.4.
	2. Current land use, zoning and capacity.	Yes, provided in Section 3.3.
	3. Projected water use efficiency savings.	Yes, provided in Section 3.6.
	4. Forecast demand for 6-year and 20-year projections with no conservation.	Yes, provided in Section 3.6.2.
	5. Forecast demand for 6-year and 20-year projections with conservation savings.	
Efficiency Program	1. Describe existing water conservation program.	Yes, provided in Section 5.3.
	2. Identify and describe establishment of conservation goals	
	3. Evaluate goals for cost-effectiveness.	
	4. Describe the WUE measure proposed to meet the goal for the next 6 years.	
	5. Describe education of customers about efficiency practices.	
	6. Estimate projected water savings from the proposed WUE measure.	Yes, provided in Section 5.4.
	7. Describe how the efficiency program will be evaluated for effectiveness.	Yes, at bimonthly billing periods and annual WUE reports.
	8. Evaluate distribution system leakage.	Yes, constantly at monthly DOH reporting, bimonthly billing periods and annual WUE reports.
	9. Evaluate rate structures that encourage water demand efficiency.	Yes, current rate structure is based on usage.
	10. Describe the water supply characteristics to convey the importance of water use in the community.	Yes, provided in annual CCR and newsletters.
Distribution System Leakage	1. Calculate annual total production and authorized consumption using Rule guidelines.	Yes, provided in Section 3.5.3 and reported annually to DOH.
	2. Calculate annual distribution system leakage using Rule guidelines.	
	3. Reduce leakage.	Yes, see Appendix E for Water Loss Control Action Plan.
	4. Develop water loss control action plan if leakage is over 20% for a rolling 3-year average.	
Goals	1. Establish measurable conservation goal.	Yes, measurable goals were established in public process for this WSP.
	2. Use a public process to establish goal.	

	3. Report annually on progress.	Yes, in annual WUE reports.
Performance Reports	1. Submit WUE report to DOH by July 1.	Yes, Lewis County has submitted annual performance reports since 2011.
	2. Share the WUE information with customers.	
	3. Make WUE report available to the public upon request.	

5.3 CURRENT CONSERVATION PROGRAM

Lewis County established programs and practices to decrease the amount of water loss and to increase the efficient use of treated water. Water loss was a high priority when Lewis County began operation of the system in 2011. The current conservation program includes the following activities:

1. **Distribution System Meter.** The Utility has a meter at the Plant that measures finished water sent into the distribution system. The meter was checked for accuracy and calibration in October 2013.

2. **Service Meters**. All services are metered. However, when the county acquired the system, the meters were over 20 years. At this time all of the service meters have been replaced since Lewis County took over the operation of the system.
3. **Rate Structure.** Lewis County established a bimonthly base rate and usage rate for water service in April 2011. This replaced the bimonthly flat rate that included up to 9,000 gallons of water. The rate structure has adequately served the system since 2011 but will need to be reevaluated to balance increasing costs versus the lower water production due to system repairs.

4. **System Leak Detection.** Lewis County retained a professional leak detection survey of the water distribution system in August 2011. Problem areas were repaired and completed in 2012. The county also repaired a very large leak (approximately 30,000 gpd) in SR 506 on August 4th, 2014. The system leakage and associated water production has dropped dramatically since this event as noted in Chapter 3 above, and depicted graphically in Graph 3.1.

5. **Leak Detection and Repair.** Lewis County conducted surficial investigations of leaks, and responded promptly to leak repairs. A procedure to repair leaks was developed to use the Lewis County Alert notification system and to cross train county personnel so as to have a repair crew readily available.

6. **Tank Inspection.** The 250,000 gallon metal water tank and 60,000 gallon concrete clearwell were inspected by professional divers in July 2013.

7. **High water usage notification.** Lewis County notifies customers of abnormally high water usage on their water bill. These high usages are usually indicative of a leak on the customer side of the meter. Procedures were also developed for fee waivers and payment plans to encourage customers to repair leaks immediately.

8. **Response to Customer Service Leaks.** Lewis County developed a procedure to respond to customers' enquiries about potential leaks by conducting a check at the service meter, meeting with the customer, and providing instructions for a simple home leak test.

9. **Water Supply Characteristics.** Lewis County uses the annual Consumer Confidence Report to inform customers of the characteristics of their water supply.

10. **Customer Outreach**. Lewis County issues newsletters to provide information about the water utility, water conservation and other information. Newsletters are also available on the county website.

11. **Capital Improvement Projects.** Lewis County constructed 8,580 lf of new water main complete with service connections to replace old leaky mains and service connections in 2012.

12. **Hydrant Replacements.** Lewis County replaced and repaired fire hydrants with a history of known leaks.

13. **Billing Software**. Lewis County has installed a new utility module of CAMS (Cost and Project Accounting Management System) to process bills, work orders and invoices with an interactive database that can format bills to show water usage patterns.

14. **Water Audit.** Lewis County completed a water audit using the AWWA M-36 water audit program.

5.4 CONSERVATION PROGRAM FOR 2014 - 2020

Lewis County is adopting a water use efficiency goal to reduce distribution system leakage to less than 20% of total production by 2034 as calculated on a rolling three-year average.

According to the Municipal Water Law, we need to implement one measure of water use efficiency. Lewis County will continue to distribute conservation literature through bimonthly billings, newsletters, annual Customer Confidence Report (CCR) and on the county website.

5.5 WATER LOSS CONTROL ACTION PLAN

Current conservation efforts have reduced the water loss volumes since 2011, with a major leak repaired in August 2014. This shows that the system water leakage is below 10%. However, the three-year average still exceeds 20% so a water loss control action plan was developed for the system. The water loss control action plan is in Appendix E.

6. WATER QUALITY

This chapter reviews state and federal drinking water regulations, assesses the Utility's compliance for the period between 2011 through 2015, and describes the Utility's programs and procedures to address current and future compliance.

6.1 SYSTEM OVERVIEW AND COMPLIANCE RESPONSIBILITY

The Utility has one surface water source at the Cowlitz River. The raw source water is conveyed from the intake to the treatment plant. Water is treated using coagulation, filtration and addition of chlorine. Sodium hypochlorite is used to provide disinfection and a disinfectant residual in the transmission and distribution systems. A description of the supply source, intake facility, treatment plant and distribution system is summarized in Chapter 2.

6.2 SAFE DRINKING WATER ACT AND WAC 246-290

The federal Safe Drinking Water Act (SDWA) and 1996 Amendments are the regulatory federal directives for drinking water quality. The U.S. Environmental Protection Agency (USEPA) administers the SDWA as a regulatory framework for public water supply systems.

Washington State law incorporated the SDWA and amendments as Chapter 246-290 of the Washington State Administrative Code (WAC). DOH administers and enforces this WAC. As a Group A water system, the Utility is required to meet drinking water quality regulations and follow monitoring and reporting requirements.

Table 6.1 lists the effective drinking water regulations applicable to our system.

TABLE 6.1 – APPLICABLE SAFE WATER DRINKING ACT (SWDA) REGULATIONS

RULE AND DATE RULE BECAME EFFECTIVE	PARAMETERS REGULATED	TYPE OF REGULATION
Chemical Contaminant Rules		
• Phase I Rules (1989)	Volatile organic chemicals (VOC),	Finished Water
• Phase II and Phase V Rules (1993)	VOC, inorganic chemicals (IOC) and synthetic organic chemicals (SOC)	Finished Water
Consumer Confidence Rule (1998)	Water quality compliance reporting to customers	Notification
Lead & Copper Rule (1992) Lead & Copper Rule Minor Revisions (2000)	Lead & copper, and treatment for corrosion control	Distribution System
Microbial Disinfectants/Disinfection Byproducts Rules		
• Filter Backwash Rule (2001)	Cryptosporidium and other microbial contaminants	Treatment
• Long Term 1 Enhanced Surface Water Treatment (2002)	Cryptosporidium and other microbial contaminants	Treatment

• Stage 1 Disinfectants/Disinfection By-Products (D/DBP) Rule (2002)	Disinfectant residual, total trihalomethanes (TTHMs), and haloacetic acids (HAA5)	Distribution System
• Stage 2 D/DBP Rule (2006)	TTHMs, HAA5	Distribution System
• Surface Water Treatment Rule (1990)	Turbidity, disinfection, viruses, *Legionella, Giardia lamblia*, and disinfectant residual.	Treatment
• Total Coliform Rule (1990)	Coliform bacteria	Distribution System
Public Notification Rule (2000)	Notification to public after water quality violation	Notification
Unregulated Contaminant Monitoring Program*		
• UCMR1 (2000)	Replaced by UCMR2	Finished Water
• UCMR2 (2007)	Monitoring for contaminants included on assessment and screening lists	Finished Water

*The UCMR program was developed in coordination with the Contaminant Candidate List (CCL). The CCL is a list of contaminants that are not regulated by the National Primary Drinking Water Regulations, are known or anticipated to occur at public water systems and may warrant regulations under the SDWA. Data collected through UCMR are stored in the National Contaminant Occurrence Database (NCOD) to support analysis and review of contaminant occurrence, to guide the CCL selection process, and to support USEPA's determination of whether to regulate a contaminant in the interest of protecting public health.

6.3 REGULATIONS AND COMPLIANCE

This section will describe the regulations, its application to the Utility and our compliance status. For ease of describing the regulations and application in the Utility, the regulations were grouped into four processes. The water processes are: 1) Treatment; 2) Finished Water; 3) Distribution System; and 4) Notification. Table 6.1 shows where the rules apply within our operations.

Public water suppliers have the responsibility of meeting the requirements of the regulations on a daily basis. Monitoring requirements are often established for regulated contaminants to ensure that water systems comply with treatment technique requirements. Public water suppliers are required to retain certain records and to submit records to DOH.

To enable each Group A water system to comply with the annual requirements, DOH annually issues each system a Water Quality Monitoring Report (WQMR) listing the system's reporting requirements. WQMRs are usually available by April.

Drinking water requirements are often specified in terms of Maximum Contaminant Levels (MCLs). Primary MCLs are based on chronic and acute human health effects. Secondary MCLs are based on factors other than health effects such as aesthetic quality of the water.

Conducting sanitary surveys on a routine basis is an important tool to protect public health. Sanitary surveys evaluate a system's compliance with federal drinking water regulations, along with state regulations and operational requirements. These surveys must address the following

elements: source; treatment; distribution system; finished water storage; pumps, pump facilities and controls; and operator compliance with state requirements.

The frequency of sanitary surveys is once every three years. WAC 246-290 allows a reduced frequency of once every five years under system specific circumstances. Lewis County addressed issues from the following DOH sanitary surveys:

- Survey with the City conducted on November 12, 2009
- Survey with Lewis County conducted on August 15, 2012
- Survey with the Utility conducted on February24, 2015.

6.3.1 TREATMENT REGULATION

Surface Water Treatment Rules

The Surface Water Treatment Rules (SWTRs) are developed with several other rules to protect drinking water quality from contamination by disease causing microbial contaminants such as bacteria, protozoa and viruses. The SWTRs include the following regulatory Rules and USEPA dates:

- Surface Water Treatment Rule, June 1989.
- Interim Enhanced Surface Water Treatment Rule (IESWTR), December 1998.
- Filter Backwash Recycling Rule (FBRR), June 2001.
- Long Term 1 Enhanced Surface Water Treatment Rule (LT1ESWTR), January 2002.
- Long Term 2 Enhanced Surface Water Treatment Rule (LT2ESWTR), January 2006.

The SWTRs apply to public water systems that use surface water or groundwater under the direct influence of surface water as a source. These systems are known as Subpart H systems.

The 1989 Surface Water Treatment Rule (SWTR) applies to all Subpart H systems and seeks to prevent waterborne diseases caused by viruses, *Legionella*, and *Giardia lamblia*. These disease-causing microbes are present at varying concentrations in most surface waters. The rule requires that water systems filter and disinfect water from surface water sources to reduce the occurrence of unsafe levels of these microbes. The 1989 SWTR does not specifically control for *Cryptosporidium*.

The 1989 SWTR uses turbidity to measure the performance of filtration systems. In order to reduce the health risks associated with *Cryptosporidium* in finished water, the IESWTR requires improved filtration performance by lowering the turbidity standards at Subpart H systems that serve 10,000 or more people. The IESWTR did not apply to the Utility because the City of Vader system and the Enchanted Valley water system each served less than 10,000 people.

The LT1ESWTR extended this requirement to Subpart H systems that served fewer than 10,000 persons. It required additional treatment for *Cryptosporidium* at those Subpart H systems that had significant levels of *Cryptosporidium* in their source waters. The FBRR aimed to reduce pathogen concentration in the finished water by regulating the backwash water and waste streams at water treatment plants.

The Utility is a system that is on the LT2ESWTR Schedule 4 because it serves fewer than 10,000 and is not a wholesale system in a combined distribution system that contains a system serving at least 10,000 persons. Filtered systems on Schedule 4 can sample for *E. Coli* instead of sampling for *Cryptosporidium* during source water monitoring. If the *E. Coli* sampling results exceed a trigger, the system would then need to conduct *Cryptosporidium* sampling. The Utility samples monthly for *E. Coli.*

The Utility's water treatment plant monitors turbidity constantly and turbidity readings are taken daily. The monthly reports to DOH include information about the volume of treated water, amount of chemicals used, turbidity (raw water, combined filter effluent), temperature, pH, chlorine residual and contact time.

Filter Backwash Recycling Rule

USEPA finalized this rule in 2001 to govern the recycling of filter backwash water within the treatment process of public water systems. It applies to all public water systems that use surface water or groundwater under the direct influence of surface water; use direct or conventional filtration processes; and recycle spent filter backwash water, sludge thickener supernatant or liquids from the dewatering process.

The rule requires that all recycled filter backwash water, sludge thickener supernatant or liquids from the dewatering process must be returned to a location such that ALL processes of a system's conventional or direct filtration including coagulation, flocculation, sedimentation (conventional filtration only) and filtration are employed.

The Utility's treatment plant was constructed in 2002 with no recycling of filter backwash water within the treatment process.

6.3.2 FINISHED WATER REGULATIONS

Chemical Contaminant Rules

Phase I, II and V of the Chemical Contaminant Rules set MCLs for inorganic compounds (IOCs), synthetic organic compounds (SOCs) and volatile organic compounds (VOCs). Nitrates are required to be sampled annually.

As part of the Phase II Rule, systems with a significant amount of asbestos-cement (AC) pipe must conduct periodic asbestos monitoring. DOH has historically required systems with more than 10% AC pipe in their distribution system to comply with this requirement. Samples must be collected in the distribution system at a location served by AC pipe and under conditions where asbestos contamination is most likely to occur.

All IOCs, SOCs and VOCs were either below MCLs or at non-detectable levels for 2011 through 2014.

DOH issued a waiver through December 2013 for monitoring at the source of: dioxin, endothall, EDB and other soil fumigants, glyphosphate, insecticides, general pesticides, and diaquat.

The water main replacement project in 2012 significantly reduced the amount of remaining AC pipe to about 10.6%. One asbestos sample is needed between 2011 and 2019 according to DOH, and it was taken in 2013.

Unregulated Contaminant Monitoring Rule

The USEPA issued the first UCMR in 1999 with requirements that were effective from 2001 through 2006. The rule required specific small public water systems to perform monitoring and reporting of specified contaminants. The City of Vader water system as it was known at that time, was required to perform monitoring and reporting for nine contaminants. The 2008 WSP listed the contaminants: Acanthamoeba, Aldrin, Dieldrin, Hexachlorobutadiene, Manganese, Metribuzin, Napathalene, Sodium and Sulfate.

Unregulated Contaminant Monitoring Rule 2

The USEPA proposed UCMR 2 in August 2005 that includes two lists of contaminants. UCMR 2 became final in 2007. The rule required specific public water systems serving 10,000 people or less to monitor for 15 List 2 contaminants during a 12-month period from January 2008 through December 2010. The selection is made by USEPA. At this time, the water system has not been notified of any required monitoring.

6.3.3 DISTRIBUTION SYSTEM REGULATIONS

Total Coliform Rule

The Total Coliform Rule sets both health goals and legal limits for total coliform levels in drinking water by setting the type and frequency of testing. WAC 246-290-300(3) sets the monitoring requirements, and WAC 246-290-310(2) sets coliform bacteria MCLs.

A coliform MCL violation is when a coliform sample has detectable coliform bacteria. An Acute MCL occurs if the repeat coliform sample tests positive for Fecal Coliform or *E. Coli*.

In 2011, the Utility used the Coliform Monitoring Plan (CMP) identified in the 2010 WSP Amendment for the City of Vader. That plan was written when the City was managing two systems: City and EVCC. The 2010 CMP called for two coliform samples per month. Chlorine readings are also taken at the same time and place of the coliform sample collection. Coliform bacteria analyses were conducted by the Lewis County Environmental Health Laboratory.

In October 2011, one coliform sample taken at the EVCC RV dump site was unsatisfactory based on Total Coliform Present and *E. coli* absent. Repeat samples were taken at locations upstream and downstream locations in October for a total of four samples, and taken again in November 2011 along with another sample at the EVCC RV dump site for a total of five samples. This sampling procedure was conducted according to the 2010 CMP. The results of all nine samples were satisfactory. However, this incident made us evaluate each sample site in the 2010 CMP for better representation, accessibility and consistency with county policies.

In January 2012, we updated the CMP to use routine and repeat sites that were more representative of the system and accessible to our operations staff. These sites were included after approval from the customers in accordance with the county utility policies. Unprotected sites accessible to the public were locked or disconnected to discourage non-revenue

unaccounted water loss, and removed from the CMP. This plan was reviewed and approved by DOH in January 2012.

In January 2013, we updated the CMP to take one distribution system coliform sample per month and to include the use of sampling stations. Four locked, sampling stations were constructed in 2012 to remove the uncertainties associated with sampling at customers' outdoor faucets, and to adhere to county policy of staying in the utility right-of-way. This plan was reviewed and approved by DOH in January 2013. The CMP is in Appendix F.

The Utility has taken all required coliform samples and chlorine readings according to local CMPs, and has not detected coliform bacteria. All coliform samples are conducted by the accredited Lewis County Environmental Health Laboratory under Lewis County Health.

Lead and Copper Rule

Lead and copper are heavy metals that may be found in household plumbing materials and water service lines. Lead can cause a variety of bad health impacts such as delaying physical and mental development in infants and children. Copper can cause aesthetic issues along with short-term and long-term negative health impacts.

The Lead and Copper Rule establishes requirements for monitoring, action levels, and compliance to control the level of these metals at the customers' taps. To meet the established action level, 90% of all samples must have lead levels equal to or less than 0.015 mg/L and copper levels equal to or less than 1.3 mg/L. If these levels cannot be met, then systems must implement public education and a corrosion control treatment strategy for meeting these levels.

The Utility collected ten samples for lead and copper monitoring in 2013. The frequency is one sample every three years. Reporting for lead and copper is done at the 90th percentile. Table 6.2 shows the monitoring results. The results are below the established action levels.

Stage 1 and Stage 2 Disinfectant and Disinfection By-Products Rule

The SWTRs are developed with the Stage 1 and Stage 2 Disinfectant and Disinfection By-Products Rules (DBPRs). These DBPRs are intended to reduce microbial contaminants in the water and at the same time, minimize the risks posed by disinfectants and disinfection byproducts (DBPs). The disinfectants themselves can react with naturally occurring materials in the water to form unintended byproducts. Both Stage 1 and Stage 2 D/DBP Rules set enforceable limits for disinfectants and DBPs, create monitoring requirements, and specify reporting procedures.

The D/DBP Rules apply to all community and non-transient non-community water systems that treat their water with a chemical disinfectant for either primary or residual treatment. The Stage 1 and Stage 2 DBPRs established maximum contaminant levels and monitoring frequency for Total Trihalomethanes (TTHM), Haloacetic Acids (five) (HAA5) and Total Organic Contaminants (TOC). The Stage 2 DBPR required preparation of a Stage 2 DBPR compliance monitoring plan.

The Utility is conducting monitoring at the regulated frequency. The Stage 2 DBPR compliance monitoring plan is in Appendix G. Monitoring results for TTHM, HAA5 and TOC are sent directly to DOH by our contract water quality laboratory. The results are tabulated in Table 6.2.

6.3.4 NOTIFICATION REGULATIONS

Consumer Confidence Report Rule

The Consumer Confidence Report (CCR) Rule is a component of the SDWA with the aim to educate consumers about protection of their drinking water sources. The rule provides a framework that water suppliers can use to give consumers information about their drinking water, including water sources, contaminants detected in finished water, health effects of contaminants when violations occur and likely sources of detected contaminants.

DOH administers this rule in WAC 246-290, Part 7 Reporting, Subpart B-Consumer Confidence Reports. Reporting dates and contents of the CCRs are outlined in this section of WAC 246-290. Water systems must deliver their CCRs to customers by July 1, and certification of the CCR compliance is due to DOH by October 1.

The Utility has prepared and sent CCRs within the required time frame. Our CCRs summarized the monitoring results, water source information, and other actions taken for the year as required by DOH. CCRs are also posted on the Lewis County website.

Public Notification Rule

Public notification is another component of the SDWA. The current public notice requirements direct water suppliers to notify people within 24 hours of any situation that may immediately pose a health risk. Water suppliers can now also combine notices for less serious problems, and make notices easier to understand. Water suppliers have 24 hours to one year to notify their customers depending on the severity of the situation. DOH administers this rule in WAC 246-290, Part 7 Reporting.

The Utility uses the Lewis County Alert notification system and newsletters for public notification. The Alert system is used to send critical communications, from evacuation notices to missing child alerts, to registered citizens. We encourage our customers to register and post a reminder in every utility newsletter and utility billing. Lewis County Alert formally known as CodeRED has been used to notice main repairs, hydrant flushing and other operational work.

6.3.5 Sentry Internet

All required sampling analyses are forwarded to DOH Office of Drinking Water. These analyses can be accessed in the State Sentry Internet database. Water Use Efficiency reports as discussed in Chapter 5 are also available in Sentry Internet.

6.4 CUSTOMER INQUIRIES AND COMPLAINTS

Lewis County documents customer inquiries, complaints and service requests. Work orders are generated to document the service request, follow up actions and findings. Reports of leaks, a water taste, smell or odor are acted on immediately. Results of any bacteriological sampling undertaken by us in response to customer problems are shared with the customer.

6.5 LABORATORIES

At this time, we use two laboratories to perform water quality testing. These laboratories are certified by the DOH drinking water laboratory certification program for analyses methods.

Lewis County Environmental Health Laboratory
360 NW North Street
Chehalis, WA 98532
360-740-1231

ALS Environmental
1317 South 13th Ave.
Kelso, WA 98626
360-577-7222

6.6 SUMMARY OF REGULATORY STATUS AND MONITORING REQUIREMENTS

A review of the water quality monitoring results indicates that we are in compliance. Table 6-2 summarizes the regulatory requirements and the results from 2011 to 2014.

TABLE 6.2 – REGULATORY LEVELS AND MONITORING RESULTS

REGULATORY REQUIREMENTS				MONITORING RESULTS				
PARAMETER	UNIT	MCLG	MCL	2011	2012	2013	2014	FREQUENCY
Finished Water								
Copper	ppm	AL=1.3	1.3	-	-	0.102	-	Every 3 years
Lead	ppb	15	0	-	-	0.001	-	Every 3 years
Nitrate	ppm	10	10	<0.5	<0.5	<0.5	<0.5	Annually
Radium 228	pCi/L	SRL=0.5N/A	5	-	-	ND	-	Per DOH
Herbicides	Ppm	Varies	Varies	-	-	ND	-	Per DOH
Distribution System								
TTHM	ppb	N/A	80	4.76, 10.8 on 6/2011	4.9, 8.1 on 3/2012	13.1 on 8/2013	9.8 on 3/2014	Annually and per DOH
				7, 13.9 on 8/2011	6.6, 6.8 on 8/2012	10.2 on 11/2013	11.5 on 5/2014	
				5.39, 10.3 on 10/2011			12.6 on 8/2014	
							9.8 on 11/2014	
HAA5	ppb	N/A	60	4, 8 on 6/2011	4.6, 7.9 on 3/2012	10.2 on 8/2013	9.9 on 3/2014	Annually and per DOH
				5.8, 10.9 on 8/2011	6.8, 4.8 on 8/2012	11.2 on 11/2013	10.4 on 5/2014	
				4.6, 8.9 on 10/2011			9.9 on 8/2014	

							10.2 on 11/2014	
TOC	mg/l	SRL=0.7 since 8/2012	-	0.83 on 6/2011	0.91 on 1/2012	0.64 on 8/2013	0.87 on 3/2014	Taken with TTHM & HAA5 samples. Monthly samples taken from 6/2011 through 4/2012 per DOH.
				0.81 on 7/2011	1.09 on 2/2012	1.33 on 11/2013	0.78 on 6/2014	
		SRL=0.5		0.73 on 8/2011	1.29 on 3/2012		0.76 on 8/2014	
				0.63 on 9/2011	1.03 on 4/2012		1.08 on 11/2014	
				0.73 on 10/2011	0.74 on 8/2012			
				1.17 on 11/2011	0.75 on 10/2012			
				0.99 on 12/2011				
Asbestos	MFL	RL=1.4	7	-	-	ND	-	Per DOH

AL Action Level is the concentration of a contaminant which if exceeded, triggers treatment or other requirements which a water system must follow.

MCLG Maximum Contaminant Level Goal is the level of a contaminant in drinking water below which there is no known or expected risk to health. MCLGs allow for a margin of safety.

MCL Maximum Contaminant Level is the highest level of a contaminant that is allowed in drinking water. MCLs are set as close as feasible using the best available treatment technology.

MFL Millions of fibers per liter.

N/A Not Applicable.

ND Not Detected.

pCi/L Picocuries per liter (a measure of radioactivity).

ppb Parts per billion, or micrograms per liter.

ppm Parts per million, or milligrams per liter.

RL Reporting Level.

SRL State Reporting Level.

7. SOURCE WATER PROTECTION

In Washington State, water supply systems using a surface water source must develop and implement a watershed control program to protect the water supply and health of their customers. This chapter documents our watershed control program to protect the source water quality by identifying potential pollutant sources, raising public awareness, monitoring, and controlling all adverse effects to the best extent possible.

DOH classifies source water based on both vulnerability and susceptibility. Vulnerability is the water source's potential for contamination: the physical susceptibility to the infiltration of contaminants; and source's risk of exposure to contaminants. Susceptibility is determined by conditions that affect the movement of contaminants from the land surface into a water supply. DOH has classified our source water as LOW vulnerability and HIGH susceptibility.

The LOW vulnerability rating by ODW is only with regard to Synthetic Organic Compounds (SOC's) since there is a low use of SOC's in Lewis County. The water shed is MODERATELY vulnerable to Volatile Organic Compounds (VOC's). However, due to the abundance of roads and railroads within the water shed and in close proximity to the Cowlitz River, it would appear that the water shed should be rated as HIGH for vulnerability to potential contamination. The stated ratings ODW are only for VOC's and SOC's and not for all potential contaminants.

7.1 REGULATORY REQUIREMENTS

The adequacy of source water protection is evaluated in the following State code:

- WAC 246-290-135(5) Source Protection
- WAC 246-290-668 Watershed Control
- WAC 246-290-678 Reliability for Filtered Systems

Source Protection

The watershed control program must include a description of the watershed including location and size, hydrology, land ownership and activities that may adversely affect source water quality according to WAC 246-290-135(5). Additional descriptive elements include: relevant written agreements, monitoring activities and assessments of water quality.

Watershed Control

The watershed control program must be evaluated at least every six years with a description of the watershed and characterization of the hydrology according to WAC 246-290-668. All changes over the previous six years must be described. A monitoring program must also be in place to assess the adequacy of the watershed control plan.

Reliability

Water systems with a filtration system must have reliability features according to WAC 246-290-678. Some reliability features include: alarm devices, standby replacement equipment and redundant multiple filter units.

7.2 WATERSHED CONTROL PROGRAM

7.2.1 Watershed Description and Characteristics

Our intake structure is at River Mile 27 on the Cowlitz River, approximately 9.5 miles upstream from its confluence with the Toutle River. The watershed drainage area above the intake is approximately 1,400 square miles with elevations ranging from 70 ft at the intake structure to about 14,000 ft at the headwater on the east side of Mt Rainier. Figure 7.1 shows the watershed boundaries above the intake structure. This watershed is the northwestern portion of Water Resource Inventory Area (WRIA) Number 26, the Lower Cowlitz River Basin. Tributaries within the watershed include:

- Coon Creek
- Foster Creek
- Bear Creek
- Lacamas Creek
- Salmon Creek
- Blue Creek
- Otter Creek
- Brights Creek
- Cispus River
- Tilton River

The terrain within the basin varies from the steep snow and glacier covered slopes of Mt Rainier and the Cascade Mountain Range down to the gentler valley slopes along I-5. The vegetation is predominately forestland with developed towns and communities along SR 12. Figure 7-2 is a map of public lands in WRIA 26 as mapped by Ecology in October 2011.

7.2.2 Identification of Activities and Land Uses Affecting Water Quality

Ownership and land use within the basin varies due to the extreme size of the watershed. Ownership is made up of public lands (Mt Rainier National Park, Gifford Pinchot National Forest, Tatoosh Wilderness, Tacoma Power, State Parks) and private lands. Much of the land is privately owned with large tracts owned and managed for commercial timber harvesting by Weyerhaeuser Corporation, West Fork Timber, and Port Blakely. See

Figure 7-3 is a map of land use and land cover in WRIA as mapped by Ecology in February 2002. A summary of the land cover in WRIA 26 is shown in Table 7.1.

TABLE 7.1 – WRIA 26 LAND COVER

CATEGORY	SUB-CATEGORY	ACREAGE (ac)
Developed	Residential	4,102
	Business	740
Agriculture		72,597
	Conifer	154,154
Forest	Hardwood	22,751
	Mixed	11,287
Non-Forested, Logged		22,678
Aquatic	Lakes, Shoreline Marshes	99

	Riparian, Rivers	3,449
TOTAL		291,857

There are three major dams in the Cowlitz River basin upstream of our intake: 1) Cowlitz Falls Dam built in the 1990s, owned and operated by the Lewis County Public Utility District with storage in Lake Scanewa; 2) Mayfield Dam built in 1963 and 3) Mossyrock Dam built in 1968. The City of Tacoma owns and operates the latter two dams for hydropower, recreation and flood control.
Mass wasting from landslides, timber harvesting and other man made activities coupled with large precipitation events often result in high instream turbidity, but the Mayfield Lake Dam and the Mossyrock Dam generally act as large sedimentation basins. High turbidity at our intake occurs when Tacoma Power draws down the lakes in anticipation of heavy precipitation and snowmelt events. Tacoma Power alerts Lewis County Emergency Management and local agencies when drawdown flows exceed 20,000 cfs; however, high turbidity at the intake is seen at lesser drawdown flows.

High turbidity at the intake is also seen seasonally when specific riverside vegetation is in bloom such as cottonwood.

Developed lands and agriculture in the upper WRIA 26 are land uses with the potential to affect water quality with the presence of fecal coliform and high nitrates. However, these effects are generally out weighted by the larger acreages of forest and aquatic lands; and treated by the wastewater systems of the rural cities and communities (Morton, Mossyrock and Toledo). These effects are further diluted by the Mayfield Lake Dam and the Mossyrock Dam.

Wildfire is a natural hazard in the county according to the *Lewis County Multi-Jurisdictional Hazard Mitigation Plan adopted July 26, 2010.* The losses from wildfires are destruction of habitat, timber, property and watersheds. Then there is the heightened vulnerability to flooding and mass wasting which are detrimental to water quality.

Lewis County ranked earthquakes, landslides and wildfires as secondary natural hazards. The City of Vader also participated in the multi-jurisdictional hazard mitigation plan project. Although Vader noted "no prior and unlikely to experience" these hazards, Vader acknowledged the catastrophic effect to city residents.

7.2.3 Watershed Management and Control Measures

Management of the upstream activities of the large land use categories are regulated by other federal, state and local agencies. For example, timber harvesting and farming activities by the State Department of Natural Resources under Forest Practices Act; dam operations by the Federal Energy Regulatory Commission; NPDES permitting by the State Department of Ecology; construction in waterways by the State Department of Fish and Wildlife; public road construction by Lewis County and State Department of Transportation (WSDOT); private road construction and stormwater management of new impervious surfaces by Lewis County, and local building and land development activities by Lewis County.

One existing control measure is the review of proposed building and land development activities. Our staff is also involved in reviewing project environmental checklists and issuing development

permits. Proposed projects near the river intake and in our service area are flagged in GIS databases used in the county building and land development review process.

We respond to utility locate requests from Underground Locate in our water service area. Although our focus is primarily to protect our infrastructures, this request provides an opportunity for us to talk to contractors and homeowners; and to informally review their project.

We support efforts for point source control projects such as local and regional wastewater treatment improvement projects. For example, the City of Toledo is the nearest upstream city and has a proposed wastewater treatment facility plant upgrade project.

The water intake facility is on property provided to the county utility by easement. The property is undeveloped and used for riverside recreation. Lewis County improved access control by changing the locks immediately in 2011, granting access only to the owner and approved utility personnel, and monitoring the gate and intake facility daily.

7.2.4 Monitoring Program

Monitoring at the source intake is made of continuous turbidity readings and fecal coliform bacteria samples.

There are monitoring programs of the Cowlitz River performed by others. Although their data may not be immediately available, it is a useful as a "report card" of the river and for a long-term water quality trend.

State Department of Ecology monitors water quality on the Cowlitz River at two stations. The Cowlitz at Kelso has been in operation since 1960 and the summary is "Overall water quality at this station met or exceeded expectations and is of lowest concern. (based on water-year 2013 summary)". The other station is on Lacamas Creek at SR 506 located about 0.2 mi upstream from the confluence with the Cowlitz River. The confluence is approximately one mile upstream of our river intake. The Lacamas Creek station has one year of monitoring and the preliminary summary is "Overall water quality at this station is of moderate concern. (based on water-year 2013 summary)". Ecology samples for the following parameters: conductivity, fecal coliform, flow, nitrate-nitrite, phosphorous, nitrate+nitrite-nitrogen, oxygen, pH, temperature and turbidity.

Another monitoring program is the USGS streamflow program. The closest river gage to the intake structure is USGS Station 14238000 located below the Mayfield Dam. Mean annual flow at the gage from 74 years of data is 7,110 cfs and extreme high and low flows are 22,900 cfs and 1,520 cfs, respectively. Instantaneous flow data can be accessed from the USGS site and from the Lewis County website through the river gage map. We use this site when heavy rains are in the forecast and there is the likelihood of high flow releases by Tacoma Power.

7.2.5 System Operations

We have reliability features in place. Water quality at the Cowlitz River intake is monitored daily. Alarms are in place to alert personnel about high turbidity readings, river level and power outage. We keep an inventory of feeder pumps and replacement parts along with maintaining vendor lists and accounts to expedite purchase of parts and equipment. We also have agreements set with other nearby utilities and municipalities for assistance and to share resources.

7.2.6 Future Watershed Protection Efforts

The County will conduct an inventory of potential contaminate sources using Ecology's Facility/Site Identification Database. This database lists any operation that is a potential or active source of pollution. Because of the vast size of the upstream lands, the evaluation will likely focus on the most effective areas. The geographical areas of concern are likely to be:

- Within a 0.25 mile buffer from the river intake at River Mile 27 on the Cowlitz River.
- Within the water utility service and facility areas.
- Within a 200-ft or as determined buffer from the water utility service and facility areas.

The County will develop efforts to protect the land around our river intake facility such as a watershed control plan agreement or a conservation easement with the property owner.

WRIA 26 (Cowlitz) & Vader Surface Water Intake
Lewis County, Washington

O:\maps\water-sewer\Vader\Intake_and_WRIA_26.mxd

Oct. 7, 2014

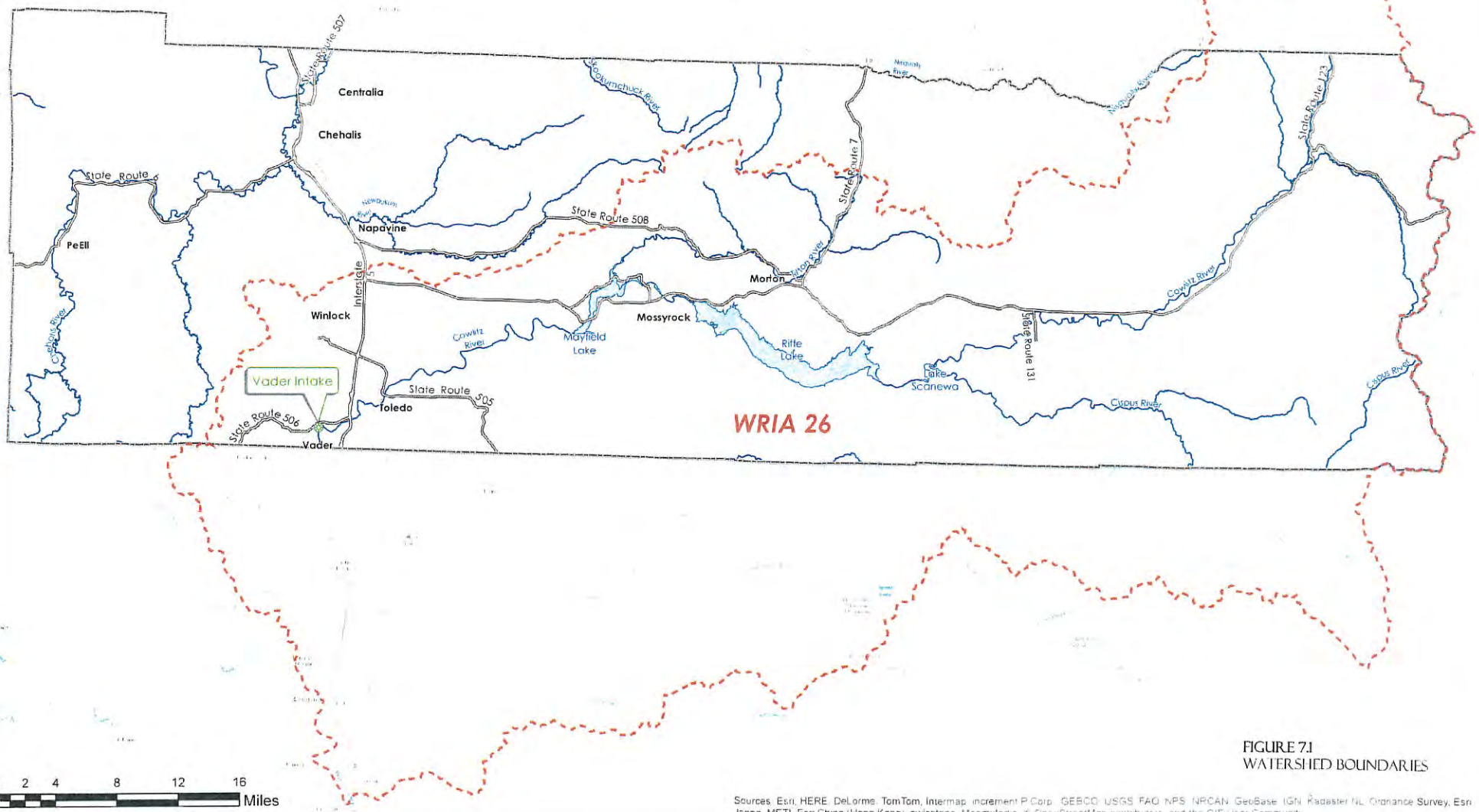

FIGURE 7.1
WATERSHED BOUNDARIES

Sources: Esri, HERE, DeLorme, TomTom, Intermap, increment P Corp., GEBCO, USGS, FAO, NPS, NRCAN, GeoBase, IGN, Kadaster NL, Ordnance Survey, Esri Japan, METI, Esri China (Hong Kong), swisstopo, MapmyIndia, © OpenStreetMap contributors, and the GIS User Community

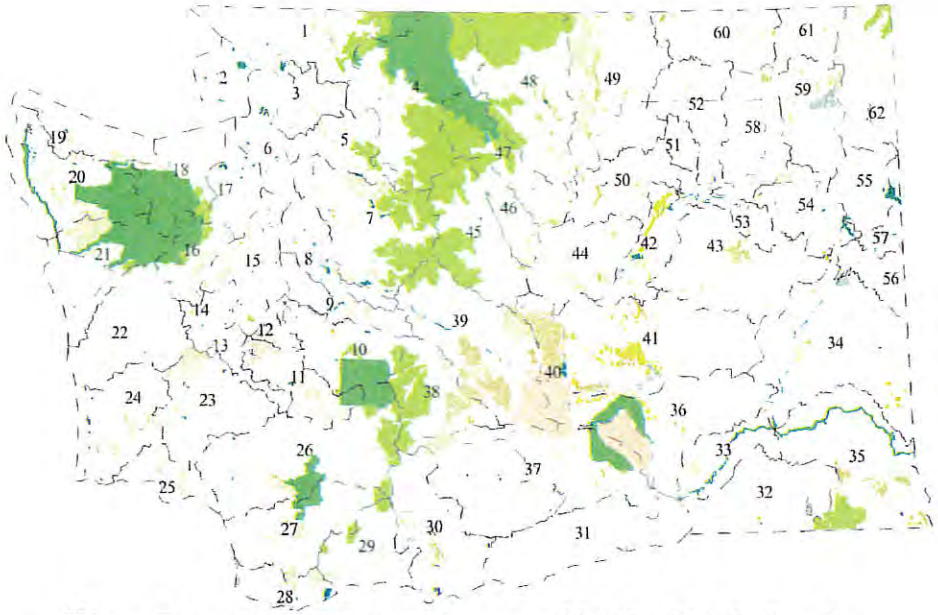

Water Resource Inventory Areas and Major Public Lands
WRIA/Land Management Key Page For Maps mpl1 - mpl62

- US Forest Service
- USFS Wilderness Area
- US Park/Recreation/Monument
- US Fish and Wildlife
- US Bureau of Land Management
- US Bureau of Reclamation
- US Defense/Energy
- Wa. Dept. of Natural Resources
- Wa. Dept. of Fish & Wildlife
- Wa. Parks & Recreation
- Public School/Hospital/Prison
- Municipal, Park
- Municipal, Watershed
- Tribal Lands
- Inventoried Roadless Area (IRA)
- Incorporated City
- Unincorporated - Urban Growth Area (UGA)
- Federal/State Highway
- Major Road (paved)
- Major Road (unpaved)
- Airport
- Rail
- Ferry
- Rivers/Streams
- Canal/Pipe
- WRIA
- County
- Campground
- Boat Launch

Ecology - Water Resource Inventory Areas 2000 1:24K
WDNR - Major Public Lands 2011 1:24K
WDNR/Ecology - County Boundaries 2003 1:24K
WDFW/Ecology - Hydrography 2005 1:100k
WDOT/WDNR - Transportation 2007 1:24k
Ecology - City/UGA 2011 1:24k
RCO - Boat Launch 2006 1:24k
USFS - IRA 2000 1:24k

The Dept. of Ecology makes no guarantee for the accuracy of data represented on these maps.
Access to some Public and Tribal land may be restricted.

WASHINGTON STATE DEPARTMENT OF ECOLOGY

GIS Technical Services
10/12/11

FIGURE 7.2
LAND TYPES IN WATERSHED

Cowlitz Water Resource Inventory Area (WRIA) #26

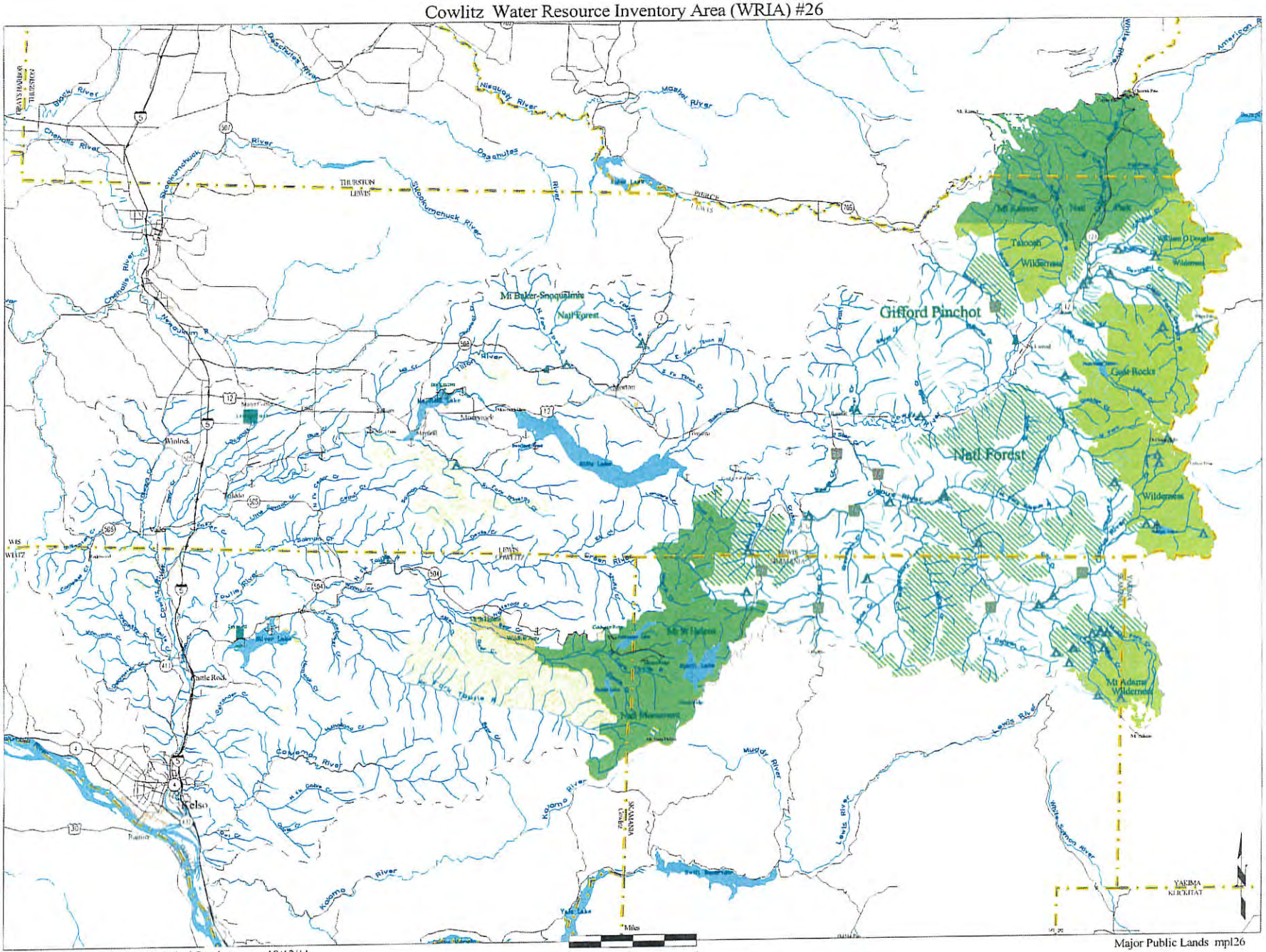

Wa. Dept. of Ecology, GIS Technical Services 10/12/11

Major Public Lands mpl26

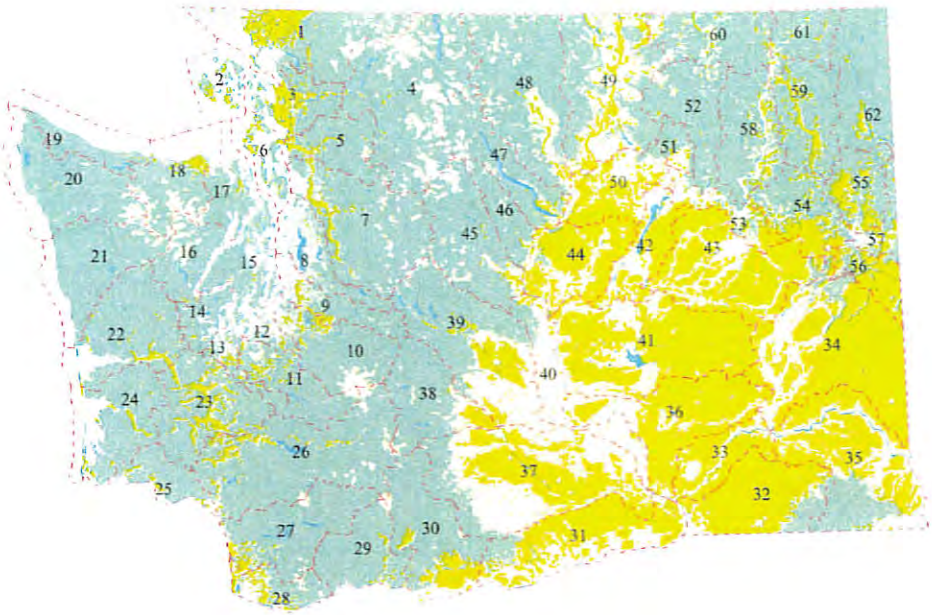

Water Resource Inventory Areas and Land Use/Land Cover

- Agriculture
- Forest (evergreen)
- Forest (mixed)
- Transitional
- Shrub
- Grass (herbaceous)
- Barren
- Urban (commercial)
- Urban (residential)
- Glacier
- Water

- Federal/State Highway
- Secondary Route
- Rivers/Streams
- WRIA Boundary
- County/State Boundary

Note: Not all colors/types represented in image above

Land Cover Source:
Land Use/Land Cover - USGS 2000 National Land Cover Data
Multi resolution Land Characterization (MRLC), 30 meter
resolution Landsat TM data, 1986 - 1996.
http://landcover.usgs.gov/nationallandcover.html

Other data:
WDNR/ECOLOGY - Water Resource Inventory Areas 1999 1:24K (WRIA)
WDFW/ECOLOGY - Hydrography 1998 1:100k (HYDROFW)
WDOT - Transportation 2000 1:24k (SR24K,ROADS24K)

WASHINGTON STATE DEPARTMENT OF ECOLOGY

GIS Technical Services

02/26/02

FIGURE 7.3
LAND USE & LAND COVER
IN WRIA 26

Cowlitz Water Resource Inventory Area (WRIA) #26

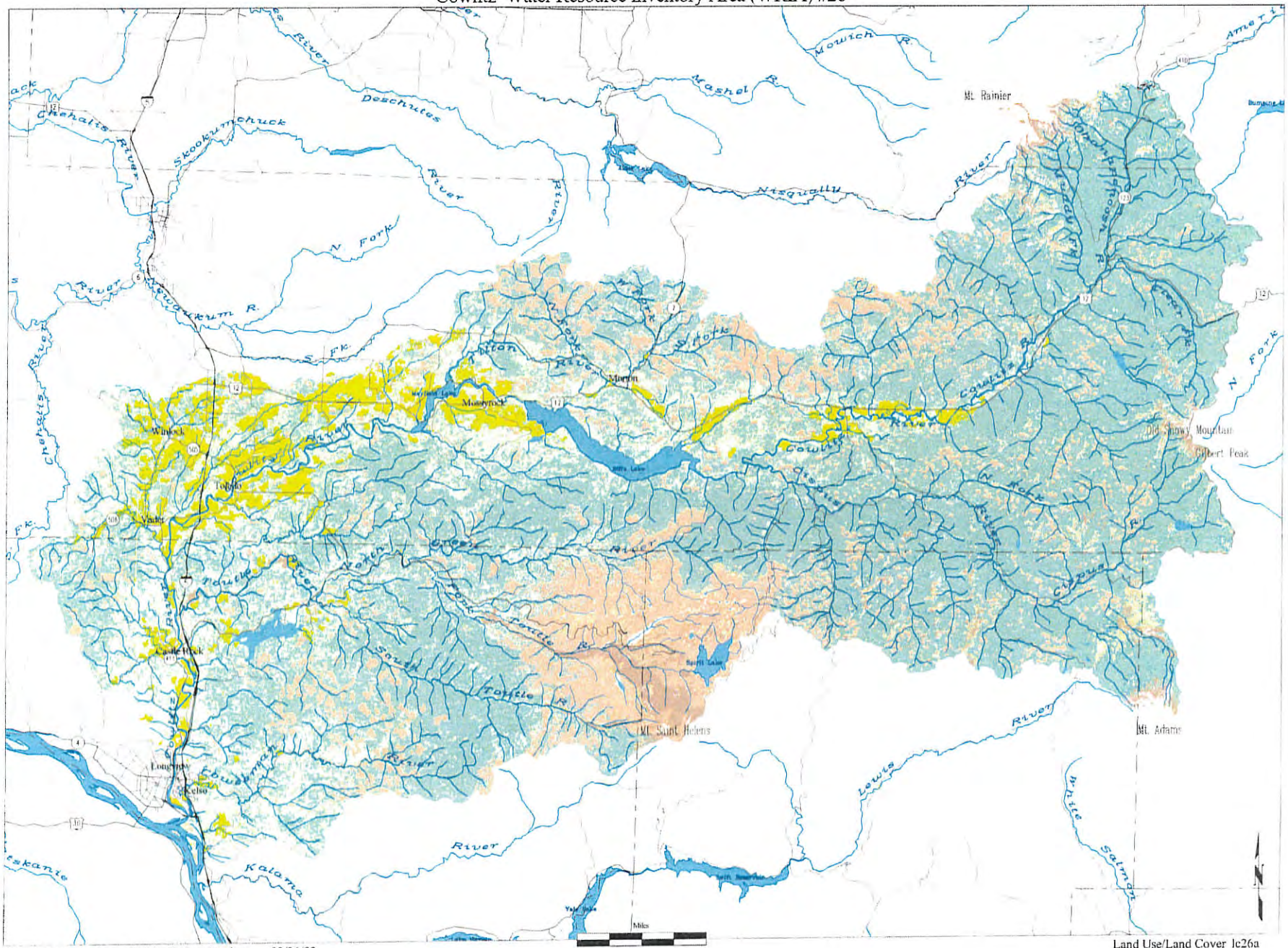

8. OPERATION AND MAINTENANCE PROGRAM

This chapter summarizes the programs and procedures used to ensure safe and reliable potable water to our customers. It includes a description of the management of the utility system in the county organizational structure; system operations; preventive maintenance; standard operating procedures; asset management and inventory; emergency response program; cross-connection control program; and record keeping.

8.1 MANAGEMENT AND PERSONNEL

8.1.1 Organizational Structure

Lewis County is a three commissioner form of government. Each county commissioner is elected to a four-year term. The county is divided into three districts of relatively equal population as determined by federal census every ten years. Five departments report to the county commissioners: Public Works, Community Development, Health & Social Services, Central Services and Fiscal/Budget.

8.1.2 Public Works

The maintenance and operation program of the water system is the responsibility of the Public Works department. Public Works is also responsible for county road operations & maintenance, traffic engineering, engineering services for capital projects, GIS, solid waste management, surveying and property management. Even though Department employees have their own specific duties in their "home" division/program, there is shifting and sharing of personnel and resources to manage and operate the water system. A description of the utility management under Public Works is best separated into three categories of work:

- Operations
- Engineering
- Fiscal

The Administrator of the water utility is the Director of Public Works. Assistance to the Administrator is provided in a bi-weekly workgroup forum with representation by operations, engineering, administrative and fiscal staff. This workgroup reviews and resolves issues that generally are outside of the scope of our SOP. Outcomes from the workgroup may be used to define practices, develop procedures and form policies

Operations

Daily operations and maintenance are carried out by the Certified Plant Operator under the supervision of the Area 3 Maintenance Supervisor. Although the Certified Plant Operator is fully capable of working independently, this arrangement is made to be consistent with county policies. This arrangement ensures that the Certified Plant Operator can get timely assistance and resources for specific maintenance activities and special projects. This arrangement also ensures personnel safety by having regular communication with other utility personnel.

The plant operator is our point person at the plant so additional responsibilities are: customer meter reads; water service installation; main break repairs; hydrant and valve testing &

maintenance; responding to work orders (locking or unlocking service meters, leak tests); vegetation clearing to keep meter boxes, hydrants and valves accessible; monitoring of the intake; maintenance of the facility premises; customer service; inspecting approved water projects; troubleshooting and other duties as assigned.

Daily operations of the plant operator are supervised by the Area 3 Maintenance Supervisor. The supervisor also fills in to respond to work orders and assembles work teams for specific maintenance activities and special projects. We have approved agreements for backup water treatment operators with a certified WTPO individual, Cowlitz County, City of Centralia and City of Winlock.

Engineering

The Utility Services Manager under the direction of the Director of Public Works manages programs and projects, provides project engineering, strategizes improvement opportunities, develops budgets, applies for funding, prepares reports and newsletters, prepares contracts and requests for services, and other assistance as needed. The manager also prepares and updates monitoring plans, standard operating procedures manual, and asset management inventory.

Administration

Administrative support is provided to the Utility by an Office Assistant and Office Manager, as needed. Personnel maintains records/information and assists the Utility Services Manager with various programs, tracks work orders, drafts correspondence, assists with special mailings, responds to customer requests on our toll free utility number, and bridges work between Public Works and Fiscal.

Fiscal

The Fiscal department prepares bimonthly customer billings, deals with payment issues, files liens on outstanding accounts, responds to customer requests on our toll free utility number and issues work orders. Work orders are primarily issued from Fiscal as they are the first responders to our toll free utility telephone line.

8.2 CERTIFICATION

Pursuant to Chapter 246-292 WAC, the utility must have certified operators. Certified personnel are required for positions that are in direct charge of a public water system or major segments of the system and are responsible for monitoring and improving water quality.

Due to the size and nature of our water service, we are required by DOH to have specific personnel certifications. The population served is less than 1,500 people. These certifications are summarized in Table 8.1.

TABLE 8.1 – REQUIRED PERSONNEL CERTIFICATIONS		
CERTIFICATION	STATUS	PERSONNEL
WDM03	Current	J. Strom
WTPO3	Current	J. Strom
WDM2	Current	F. Terry
WTPO1, WTPO3	Current, Pending	F. Terry
CCS	N/A	Contractor
BAT	N/A	Contractor

The Water Treatment System is required to have operators with a WTPO 3 certification and a WDM 2 certification. We are fully compliant with that requirement as our primary operator has both of those certifications. In addition, we currently have another individual on staff that holds a WDM 2 certification and will take the test for the WTPO 3 certification later this month (July 2016). We currently use a certified contractor for backflow assembly testing. We use the list of active certified Backflow Assembly Tester (BAT) and Cross-Connection Specialist (CCS) on the DOH website prior to calling for services. Our plant operator is pursuing CCS and WTPO3 certification. The cross-connection program is implemented by Professional Engineers registered in the State of Washington.

8.3 DAILY OPERATIONS AND PREVENTIVE MAINTENANCE

8.3.1 Standard Operating Procedures Manual

Because county staff tasked to manage and operate the Vader-Enchanted Valley water system work in different departments and divisions, a Standard Operating Procedures (SOP) Manual (see appendix L) was developed to provide guidance. The SOP outlines procedures for monitoring daily plant operations, processing work orders, opening and closing accounts, dealing with customer complaints, handling delinquent accounts, placing liens, repairing main breaks, reporting requirements to be in compliance, and other procedures foreseen in the operation and management of the utility. The SOP is revised periodically to reflect the use of new technology and revised procedures.

A maintenance schedule and summary of procedures are also included in the SOP Manual. The schedule is provided as Table 8.2.

TABLE 8.2 – RECOMMENDED MAINTENANCE SCHEDULE		
FREQUENCY	COMPONENT	INSPECTION AND MAINTENANCE
Daily	Chemical Feed Pumps	Check for operation, feed lines are not frayed and kinked.
Daily	Chemical Feed Tanks	Visually check solution levels, and make solutions if necessary.
Daily	Filters	Check floc characteristics above filter.
Daily	Turbidimeter	Visually check the flow through the turbidimeters. The desired flow rate should be in the range of 250-750 ml/min.
Daily	Turbidimeter	Check online meter reading against portable meter reading.

Daily	Valves	Visually check valves for operation and leaks.
Daily	Electric Panel/Motor Control Center (MCC)	Visually check unit for proper operation.
Daily	All Pump Mechanical Seals	Check seals for leakage.
FREQUENCY	COMPONENT	INSPECTION AND MAINTENANCE
Daily	Motors	Check motor bearing temperature. If bearings are running hot, consult motor manufacturer's instructions.
Daily	Online Chlorine Analyzer	Check indicator reagents.
Weekly	Motors	Clean oil, dust, dirt, water and chemicals from the exterior of motor. Make sure motor air intake and outlets (fan cooled motor) are unobstructed.
Weekly	pH Meter	Calibrate.
Weekly	Adsorption Media	Check condition, wash floc accumulation if necessary.
Weekly	Online Chlorine Analyzer	Check online meter reading against reliable portable water reading. Calibrate online meter if necessary.
Monthly	Portable Turbidimeter	Check standardization with Glex secondary standard.
Monthly	Alarms and Callout System	Test.
Monthly	Online Chlorine Analyzer	Clean colorimeter measuring cell with 19.2 N sulfuric acid.
Quarterly	Instrumentation	Calibrate.
Quarterly	Plant Controls	Check operations through one cycle. Test controller inputs (level switches and alarms), and check for proper Plant response.
Quarterly	Heater and Thermostat	Inspect and clean units.
Quarterly	Filter plant turbidimeters	Calibrate.
Every 3 Months or per Mgfr	Turbidimeter	Calibrate unit. Drain and clean turbidimeter body, tubing and inlet.
Semi-Annually	Chemical Feed Tanks	Drain and clean.
Semi-Annually	Floc Tanks	Drain and clean.
Semi-Annually	Online Chlorine Analyzer	Replace pump tubing.
Semi-Annually	Fire Hydrants	Flush, exercise and measure flow.
Annually	Distribution System Valves	Inspect and exercise.
Annually	Blowoffs and Dead-end lines	Flush and inspect.
Annually	Chemical Feed Pumps	Calibrate.
Annually	Vertical Turbine Pump	Change oil and grease bearings.
Annually	Flow Meter	Clean and inspect propeller and bearing.
Annually	Filter Media	Check for "mudballs" or other solid accumulation.
Annually	Filter Media	Check filter for loss of media.
Annually	Chemical Pumps	Clean and service pumps.
Annually	Static Mixer	Clean mixer.
Annually	Blowers	Lubricate.
4-6 Years	Clear well and Reservoir	Conduct interior and exterior inspection for solids and structural integrity. Clean and correct structural problems if necessary.

5 Years	Reservoir	Pressure wash or clean exterior to remove buildup of dirt and moss.
10-15 Years	Reservoir	Inspect exterior and interior for painting or recoating

8.3.2 Supply Source

The Cowlitz River intake facility is visited on a weekly basis by the operator who checks intake and pump house, notes readings, inspects grounds for vandalism and maintenance, and performs general upkeep and maintenance.

8.3.3 Treatment Plant

Maintenance of the water treatment plant is very important in maintaining the level of water service in a water system. Our certified operator manages the treatment plant. Daily operations include: taking daily water quality samples; recording and completing daily and monthly reports; checking chemical feed systems; adjusting chemical feed rates as needed; and monitoring backwash cycle operations.

8.3.4 Storage

Reservoirs can be vulnerable to contamination in public water systems. Contaminants can enter the reservoir through cracks or openings at the event, overflow or drain screens. Vandalism can also compromise reservoir water quality.

The reservoir is highly visible and adjacent to the plant. Our operator observes water levels and conditions daily. The plant grounds are fenced with a locked gate and monitored. Vegetation is kept cleared from the reservoir to minimize vegetative litter on and around the reservoir, to maximize air flow and to maintain visibility.

8.3.5 Distribution System

Maintaining records of water main conditions and repair work can play a significant role in preventing water main breaks and emergency shutdowns. By documenting leaks and maintenance work on each pipe section, trends and patterns can be established and severe problems can be avoided. Lewis County keeps and maintains a GIS database of the system.

Dead-end water lines are susceptible to water quality problems and should be flushed to remove stagnant water, chlorine residual and any sediment that may have been deposited. Lewis County has this activity on an annual schedule along with a plan to construct blowoff assemblies or hydrants at dead-end lines.

Valves and fire hydrants are important water system components, and are necessary for water system control during emergencies, scheduled repairs and maintenance, and water main extensions. Quite often fire personnel, contractors and others who operate the system valves may inadvertently leave valves closed or partially open at the end of their project. A routine valve exercise program will ensure that normally open valves stay fully open. Exercising valves also helps in finding damaged valves. A routine hydrant flush-and-exercise program will also ensure that hydrant seals and components are in good shape.

Lewis County adopted policy in October 2010 to allow only authorized Lewis County personnel to operate the system valves and hydrants. The local fire district housed in city limits, Cowlitz-Lewis County Fire District #20, can operate fire hydrants for fire-fighting purposes; but filling of water tanks at the hydrants and exercising of hydrants are not allowed. A special metered standpipe was constructed in 2012 for the local fire district for use in cleaning equipment and filling tankers.

8.3.6 Service Meters

The utility uses manual read meters. Our operator notes the meter readings and forwards the information to our Fiscal division for billing. An automated meter reading system was considered in 2012 but deemed not cost effective due to the size of the customer base, initial startup and future maintenance costs of hardware and software, and lost opportunities to interact with customers.

However, the installation of a new billing system to go online in 2015 and of new service meters for the entire system in 2015 will simplify and expedite the time spent by all Utility personnel for bimonthly manual meter readings. The new software also can refigure reading routes to maximize efficiency, and is compatible with touch pad readers. The new service meters will be in gallons, thereby eliminating the use of cf in the Enchanted Valley service area.

8.4 EMERGENCY RESPONSE PROGRAM

DOH requires an emergency response program to be included in the operations program under WAC 246-290-415. The purpose of the emergency response program is to guide personnel through system malfunctions, natural disasters and other events affecting routine system operation.

It should be noted that there are other countywide emergency management related plans and efforts headed by the Lewis County Sheriff's Office Division of Emergency Management (Emergency Management). These are: "2010 Comprehensive Emergency Management Plan", by Lewis County Sheriff's Office, Division of Emergency Management; and "Lewis County Multi-Jurisdictional Hazard Mitigation Plan" adopted on July 26, 2010.

The emergency response program as required by DOH was developed to be consistent with other existing county efforts. The emergency response plan includes: a contingency plan; a vulnerability analysis; and emergency response procedures.

8.4.1 Contingency Plan

The contingency plan serves as a guide to Utility personnel for developing response procedures. An emergency roster is provided. Guidance is given for: determining priority services; notifying DOH; maintaining inventory of materials; and responding to protect public health or safety.

Emergency Roster

A current emergency roster is provided in Table 8.3. This roster is updated whenever there are changes and an updated version is kept in our SOP Manual.

TABLE 8.3 – EMERGENCY ROSTER			
PUBLIC WORKS DEPARTMENT CONTACT		PHONE	MOBILE
During Business Hours:	Public Works Office	360-740-1122	
	Water Treatment Plant	360-295-3225	360-520-2433
	Road Maint. Supervisor	360-785-3304	360-880-2605
	Utility Services Manager	360-740-2759	360-520-3164
After Business Hours:	Water On Call Person		360-520-2433
	Road Maint. Supervisor		360-880-2605
	PW Director		360-556-9093
	Utility Services Manager		360-520-3164
EMERGENCY 911			
During Business Hours:		911	
After Business Hours:	Immediate Response	360-740-1105	
	Non-Emergency (voice mail)	360-748-3921	
LEWIS COUNTY			
	Lewis County Alert	360-740-1151	
	Emergency Mgmt	360-740-1151	
	Health Dept Lab	360-740-1237	
	Sheriff	360-748-9286	
STATE			
WSDOH - SW REGION	Regional Engineer	360-236-3030	
WSDOH	After Hours Hotline	877-481-4901	
ECOLOGY	Spill Response	360-407-6300	
OTHER			
Burlington Northern RR	Trouble Reports	800-832-5452(Ext. 2)	
	Longview/Kelso	360-758-2361	
Castle Rock School District		360-501-2940	
City of Vader		360-295-3222	
CenturyLink	Area Office	360-736-9941 800-247-7285	
Cowlitz-Lewis County Fire District #20		360-295-0906	
Evergreen Rural Water		360-981-5736	
Lewis County PUD		360-748-9261	
Providence Hospital		360-736-2803	
Puget Sound Energy	Gas Division	360-736-3383 800-999-4964	
Utility Underground Locate Center		800-424-5555	

Inventory of Materials

Lewis County maintains a supply of frequently used materials to make emergency repairs. The supplies include the materials necessary for the size and type of pipe in the existing distribution system. To avoid a large collection of inventory, we will target and replace irregular pipe sizes and types with the major, commonly used sizes and types.

Other existing measures are: established accounts with local suppliers; interlocal agreements with Group A municipalities for shared resources; and updated vendor lists. A list of updated vendors is kept in our SOP Manual.

General Field Response

The initial response by Utility personnel to an emergency is to take prompt action to remove the threat to public health or safety. Where appropriate, bystanders may be warned, traffic diverted, impacted area isolated, material removed or other actions taken without further risk to personnel and the public.

Next, the Maintenance Supervisor is contacted and informed of the damage and apparent cause. The Maintenance Supervisor will send a crew to isolate the problem area or damaged facility, and further assess the problem to determine personnel, materials and equipment needed for correction. If needed, the Maintenance Supervisor may confer with the Utility Services Manager and Administrator as to the preferred corrective action and options.

Throughout the emergency, communication contact shall be kept between work crews, the Operator, Maintenance Supervisor, Utility Services Manager, the utility Administrator and other key participants to enhance coordination with the county comprehensive emergency management plan and to keep county administrators informed to issue public notifications. Specific Utility personnel have authority to issue Lewis County Alert notices and public notifications.

Severity of Emergencies

Emergencies usually have a wide range of severity. Defining categories of severity can aid in determining appropriate response actions. Knowing the severity of the emergency and being able to communicate it to others will help county personnel respond effectively.

The assessment of severity is made by the person in charge. For field situations, the assessment is usually made by Operations personnel with immediate communication to Engineering. For catastrophic disasters, these incidents may involve other county services outside of Public Works such as county Health Department, Sheriff's Office, Emergency Management, DOH, WSDOT and FEMA.

A description of four categories of emergencies is provided. The categories are as outlined in DOH publication #331-211, "Emergency Response Planning Guide for Public Water Systems, May 2003". Details of the response actions are outlined in the SOP. ODW must be notified for any emergency Level 2 thru 4.

LEVEL 1 – NORMAL/ROUTINE EMERGENCY

These situations are defined as ones that: can be resolved within 24 hours, will not jeopardize public health, or can be handled normally by utility personnel. Examples are:

- Service and customer line breaks.
- Short power outages.
- Minor mechanical problems in Intake and Plant.

LEVEL 2 – MINOR/ALERT EMERGENCY

These situations are defined as ones that: can cause minor disruption in supply, pose possible contamination to the point of coordination with DOH or issuance of a health advisory to customers, or will take up to 72 hours to resolve. Examples are:

- Disruption in supply such as a transmission line break or pump failure with a potential for backflow and loss of pressure.
- Inadequate storage to handle disruption in supply.
- An initial positive coliform or E. coli sample.
- An initial primary chemical contaminant sample.
- A minor act of vandalism.
- Noticeable and continuing decline of water supply.

LEVEL 3 – SIGNIFICANT EMERGENCY

These situations are defined as ones that: have significant mechanical or contamination problems that will disrupt water delivery to customers to the point of issuing a health advisory, or may need more than 72 hours to resolve. Examples are:

- A verified acute confirmed coliform MCL or E. coli/fecal positive sample requiring an immediate health advisory to customers.
- A confirmed sample of another primary contaminant requiring an immediate health advisory to customers.
- A loss or complete malfunction of the water treatment facilities for the surface water source, including chlorination.
- A major main break or system failure resulting in a water shortage or system shutdown.
- Vandalism or threat such as intrusion or damage to a system facility.
- An immediate threat to the public health of the customers and an advisory is required.

LEVEL 4 – CATASTROPHIC DISASTER/MAJOR EMERGENCY

These situations are defined as ones that: experience damage from major damage or contamination from a natural disaster, an accident or malicious act of intent; require immediate notification of law enforcement and local emergency management services; immediate issuance of health advisories and emergency declarations to protect public health; or take several days to weeks to resolve. Examples are:

- Hazards identified in Section 8.4.2.
- Contamination of water supply or system with biological or chemical agents.
- Spills or contaminant entry within 2000 ft of the water source.

8.4.2 Vulnerability Assessment

A comprehensive hazard assessment plan was adopted by several agencies in Lewis County. Two agencies associated with the Utility—Lewis County and the City of Vader—participated and adopted the "Lewis County Multi-Jurisdictional Hazard Mitigation Plan" in 2010 and 2011, respectively. This hazard assessment plan was made to comply with the Disaster Mitigation Act

of 2000. This Act was passed as a result of escalating disaster costs occurring throughout the United States.

The purpose of the hazard assessment plan was to:

- Identify hazards
- Assess the potential for loss associated with the hazards
- Assess the vulnerability of each participant/jurisdiction to different hazards
- Develop strategies to reduce these vulnerabilities.

The results of the hazards in the Hazard Assessment Plan and the likely impact on specific elements of the utility facilities are summarized in Table 8.4. The table also included the impact of disasters on the power supply to the water utility system. Power is used to operate the intake pumps, telemetry and treatment controls.

In any disaster Level 2 – 4, the Office of Drinking Water (ODW) must be notified.

TABLE 8.4 – POTENTIAL DISASTER EFFECTS

HAZARD TYPE	POTENTIAL EFFECTS ON FACILITY TYPES:					
	SUPPLY SOURCE	INTAKE	TREATMENT PLANT	STORAGE	DISTRIBUTION SYSTEM	POWER SUPPLY
Dam Failure	X	X				
Debris Flow	X	X				
Drought	X					
Earthquake	X	X	X	X	X	X
Extreme Heat				X		X
Flooding	X	X	X			
Hailstorm						X
Ice/Snow Storm		X	X	X	X	X
Severe Windstorm		X	X			X
Volcanic Eruption	X	X	X			X
Wildfire	X	X	X			X
DISASTER TYPE						
Contamination of Water Supply	X				X	
Water Main Break					X	
Vandalism		X	X	X	X	X

Dam Failure

Description: Dam failures have the potential to affect short and long-term supplies. The abrupt release of sediment laden flows also could plug the intake.

Response: Lewis County Emergency Management is listed to be notified by Tacoma Power. Emergency Management will notify agencies and jurisdictions downstream of the dam. The impact to the plant would be minimal as the plant will call out when raw water turbidities are high, and the operator will shut the plant. Nonetheless, Operations should check the storage, raw water turbidity readings and intake facility. If time allows and conditions predict a long period

of high in-stream turbidity, personnel may consider removing the intake pump to avoid damage from high abrasive river flows.

Debris Flow

Description: Debris flow upstream of the intake has the potential to cause high in-stream turbidity.
Response: See the discussion for DAM FAILURE.

Drought

Description: Climate change with its extreme weather has a huge potential impact to our supply. Our surface water supply relies on snowfall and glacial storage.
Response: Operations will check storage and may change operations to optimize flows during times of higher dam releases. Utility will note trends and send public information to customers about water conservation. Utility may work with local jurisdictions to place water moratorium on new development, and implement water conservation measures. Utility may consider water purchase from other suppliers. Refer to the Water Shortage Response Plan in Appendix I.

Earthquake

Description: A major earthquake with a magnitude of 5.0 or greater on the Richter scale could disrupt intake, treatment, storage and distribution components of the system. Power failure and disruption to local roads could occur.
Response: Operation personnel should secure supplies and equipment to minimize falling, tippling and spillage. Operations will check above ground facilities for damage. Underground facilities may be susceptible to ground movement so Operations will check the system thoroughly for any unexplained drop in pressure, reduction in flow rate, pump failure, leakage and other signs of damage. It is possible that seismic activity may trigger dam failure and debris flow so responses to other hazards should be used: dam failure and debris flow. See the discussion for DAM FAILURE.
Operations should anticipate water use needs for fire-fighting.

Extreme Heat

Description: Water usage is generally higher in warm weather due to outdoor watering and fire-fighting so some water conservation measures may be warranted. Power usage may be higher in periods of extreme heat thereby raising the potential of power outages.
Response: Personnel should contact the Lewis County PUD to determine the nature, extent and expected duration of the power outage. The system capacity is adequate at average usage, but it should be considered with conditions (power, fire conditions, duration of periods of extreme heat) at the time. See the discussions about water conservation in DROUGHT.

Flooding

Description: Although the service area is not in a mapped FEMA floodplain, prior flooding of the Cowlitz River have caused high in-stream turbidity and damaged the intake pump. The source and cause of the flooding can eventually impact the supply. Flooding from sudden releases of melt water with no replenishment of the snowpack can lead to drought.
Response: See the discussions in DAM FAILURE and DROUGHT. Operations personnel should also ensure that equipment at the intake facility is tied down.

Hailstorm

Description: Western Washington has had some hailstorms but there is a possibility that hailstorms could increase in frequency and severity due to climate change with its extreme weather. Depending upon the duration and range of the hailstorm, it may disrupt the power system.

Response: See the discussion in EXTREME HEAT.

Ice/Snow Storm

Description: Ice and snow storms have the potential to affect all components of the system along with power failure. Severe cold weather can freeze water in the reservoir thus affecting the transmission system and water service to customers. Ice in the reservoir can also damage the tank.

Response: Water utilities in cold climates subject to long periods of freezing weather use heaters, circulation, aerators and agitators to keep water from freezing. These measures may be considered if climate and operational conditions warrant it. Treatment processes work best in a specified temperature range so personnel may modify operations to minimize risk of freezing or shut down plant. The distribution system meter vault should be pumped of standing water and above ground lines may be wrapped.

Severe Windstorm

Description: A severe windstorm can cause power failures and disrupt transportation and communication systems.

Response: See the discussion for EARTHQUAKE. Operations personnel should also ensure that equipment at the intake facility is tied down.

Volcanic Eruption

Description: Washington State has five active volcanos and another across the Columbia River so an eruption has a huge impact to our supply, intake and treatment components. The eruption of Mt St. Helens on May 18, 1980 sent ash throughout Lewis County. Disruption of power was experienced.

Response: See the discussions for DAM FAILURE, EARTHQUAKE and EXTREME HEAT.

Wildfire

Description: Wildfire has the potential to alter the hydrologic response of the watershed resulting in high in-stream turbidity conditions. A wildfire within or near the service area will need water for fire-fighting.

Response: See the discussion for DAM FAILURE and EXTREME HEAT.

Contamination of Water Supply

Description: Contamination can occur in surface supplies and may be the result of man-made practices or natural occurrences. High in-stream turbidity can occur from the aforementioned disasters. Distribution contamination can also occur through back-siphonage.

Response: See Chapter 7, Source Water Protection, for watershed control measures; and Section 8.5 Cross Connection Control Program for back siphonage.

Water Main Break

Description: Water distribution main breaks could occur from any of the aforementioned disasters and material failure.

Response: Utility personnel will immediately find and isolate the damaged waterline section, report incident, get information to customers, repair and undertake measures to protect the health of our customers. Laminated maps of the water system complete with valves and hydrants, and a valve atlas are available at the plant, operator's rig and supervisor's rig. A procedure for water main break repairs is outlined in our SOP Manual.

Vandalism

Description: Vandalism can potentially affect the entire system from intake to distribution. In addition, power supply and control systems could be disrupted.
Response: The intake and plant facilities are gated, locked, lighted, set with alarms and security cameras, and booby trapped. Entrances are cleared to be visible on the roadway. Alarms are in place for power outage and control. The county 911 system has a list of personnel to contact after normal work hours.

8.4.3 Public Notification

The Utility uses the Lewis County Alert notification system for public information. The Lewis County Alert system is used to send critical communications to registered customers from evacuation notices to missing child alerts. We encourage customers to register and post this Alert service in every utility newsletter and bill. We use Lewis County Alert to notify customers of scheduled maintenance and repair work, emergencies (for disasters and those beyond Level 1), and situations that may affect water service. In the event of potential disasters in Table 8.4 that will last longer than 24 hours, we will also post notices at several community places. One main place is the Vader Lions Club's message board along 7th Street/SR 506. This board is very visible as 7th Street/SR 506 is the main thoroughfare.

8.5 CROSS CONNECTION CONTROL PROGRAM

8.5.1 Purpose

A cross-connection is any physical arrangement where the potable water supply is connected, directly or indirectly, to any liquid of unknown or unsafe quality. This includes any liquids that may contaminate the public water supply through backflow or reverse flow. There have been numerous incidents in which water systems have been contaminated by a cross-connection, resulting in serious injury and illness to the public.

Under WAC 246-290-490, Cross-Connection Control, utilities have the responsibility to protect the water user from contamination due to cross connections. The regulation also requires utilities to develop and implement a comprehensive program to control cross connections within the system. The purpose of the program is to protect the health of water consumers and the portability of the public water system by assuring:

- Inspection and regulation of plumbing in existing and proposed piping networks.
- Proper installation and surveillance of backflow prevention assemblies when actual or potential cross connections exist and cannot be regulated.

WAC 246-290-490 mandates a cross-connection control program (CCCP) for the purposes of establishing:

- Minimum cross-connection control operating policies
- Backflow prevention assembly installation practices
- Backflow prevention assembly testing procedures
- Enforcement authority.

8.5.2 Guidance

The CCCP is developed to comply with WAC 246-290-490 and the recommended guidance:

- Manual of Cross-Connection Control published by the Foundation for Cross-Connection Control and Hydraulic Research, University of Southern CA (USC Manual).
- Cross-Connection Control Manual, Accepted Procedure and Practice published by the Pacific Northwest Section of the American Water Works Association (PNWS-AWWA Manual).
- Cross-Connection Control for Small Water Systems by DOH.

8.5.3 Program Elements

Specific issues have to be in an effective CCCP. WAC 246-290-490 outlines ten minimum elements to be in a CCCP.

Element 1: Legal Authority

The CCCP is outlined in this chapter and will be adopted with the approval of this WSP by the county commissioners. Title 13 of the Lewis County Code (LCC) lays out policies for:

- Violations and appeals (13.20.060 LCC)
- Application, review and approval (13.30.100 LCC)
- Violation of utility regulations (13.30.120 LCC)
- Cross Connection Control Program (13.30.150 LCC)
- Required inspections (13.30.400 LCC)
- Right-of-entry (13.30.410 LCC)
- Correction of unsafe conditions (13.30.500 LCC)
- Conditions of utility service (13.80.100 LCC).
- Backflow Prevention Requirements (13.80.100(6) LCC).

These policies provide authorization to implement the current cross-connection control program. Title 13 LCC is available in Appendix H.

Element 2: Hazard Assessment

Three existing cross-connection assemblies were identified in the 2008 WSP. These locations were: water treatment plant, local Little Crane Restaurant and City of Vader wastewater treatment plant (WWTP). The first two locations were addressed in March 2011: there is an air gap in the water plant and the soda machine at the local eatery uses bottled water. The backflow assembly at the local WWTP was deemed antiquated in July 2011. The City of Vader constructed a new backflow assembly and hot box in January 2013. Annual backflow assembly testing is required for the WWTP at the end of each calendar year. The date of the last testing for the City WWTP was November 2014.

To identify potential hazards, a water use questionnaire form is used. This form was developed following the guidelines in Appendix D in the DOH guidance document "Cross-Connection Control for Small Water Systems, March 2004". This questionnaire form was distributed to existing customers in December 2013. We also have all new water customers complete a water use questionnaire for water service on developed and undeveloped properties.

Lewis County requires all new building development and land development activities in the service area to have a completed Public Water Availability Notification form. A copy is in Appendix J. This form shows that we are capable of providing water service to the proposed project site. As part of the approval process, the utility asks for a completed water service application and water use questionnaire. Written approval from the local land development authority is also required to ensure that the water service applicant met local land development approvals. If any backflow prevention assemblies are required, it is noted on our database and county land development permitting database, the information is forwarded to either the City or county building official, and required to be completed before water service is provided.

Element 3: Control

Additional control measures were taken by installing backflow assemblies adjacent to the service meters for the local WWTP in 2011 and fire district in 2012. All new commercial service connections are required to install backflow assemblies as a condition of water service. Utility personnel use the current DOH approved list of backflow assemblies available at the DOH website.

Meter setters for residential customers generally have a check valve, and these types are used as we perform repairs on service lines. As resources allow, we would like to construct customer shutoff valves and replace meter setters to have additional layers of protection. Whenever possible in repairing a customer line, we install a customer shutoff valve.

Element 4: CCS Personnel

Operations personnel performed CCS program tasks when the system was managed by the City of Vader. Training has been approved and CCS certification is encouraged for current operation personnel. We currently use a contract CCS specialist.

Element 5: Inspection

We notify customers of upcoming test and completion dates. A copy of our letter is attached in Appendix I. Inspection and testing will be by a DOH certified CCS or Backflow Assembly Tester (BAT). If inspections and reports are not completed, we discontinue water service.

Element 6: Quality Control Testing Program

Testing is performed by the customer. Our notification letter includes guidance to use DOH certified BAT contractors to inspect for proper installation and testing of the backflow control assemblies. DOH certified CCS will perform cross connection hazard evaluations, and application and installation of backflow prevention assemblies.

Element 7: Backflow Incident Response

In the event a backflow incident occurs due to human error, main break or power outage, we will follow procedures similar to a water main break as outlined in our SOP Manual. The following

steps will be taken when a backflow incident has occurred, and steps may be done concurrently depending upon the situation.

- Report incident and request assistance to the Administrator and supervisor.
- Assess situation.
- Investigate and find the source of the contamination.
- Depending upon the severity of the contamination, contact WSDOH.
- Isolate the contamination by closing valves but leave one valve open to maintain pressure in the isolated segment.
- Public Works will issue a Lewis County Alert to notify customers about the incident and to not use water.
- Find the source of the contamination, discontinue service to that customer and notify customer to complete corrective action.
- If appropriate, refer customers that may have consumed the contaminant or had their plumbing system contaminated to Lewis County Health, Building Division of the Lewis County Community Development Dept., and City of Vader.
- Formulate plan to clean the contaminated system consistent with the identified contaminant(s).
- Flush portions of the affected system.
- Disinfect the flushed portions of the system.
- Notify customers of completion by issuing another Lewis County Alert or door-to-door notice.

Most chemical or physical contaminants can be flushed from the system or customer's plumbing system with adequate flushing velocity. At times, flushing may not be adequate in systems where scale and corrosion deposits (e.g., tuberculation on old cast iron mains) provide a restriction to get adequate flushing velocity, or where chemical deposits or bacteriological slimes (biofilm) are present.

In these situations, other methods such as a foam swab (pig) or alteration of the chemical contaminant may be needed. An example of the latter method could be alteration through oxidation by using chlorination or addition of detergents.

To disinfect water mains using the "slug" or "continuous flow" method, a field unit should be used for chlorine injection. The field unit can be a chemical feed metering or proportioning pump for sodium hypochlorite.

When adding any chemical, including chlorine, to remove a contaminant from the system, it is important that the chemistry of the contaminant is understood. Adding the wrong chemical could make the contaminant more toxic or more difficult to remove from the distribution main.

It is advised to contact the regional DOH office to discuss the proposed methods for contaminant removal and disinfection prior to taking corrective action.

Element 8: Public Education

Information about cross-connection control is provided to our customers in newsletter and the latest water use questionnaire (December 2013).

Element 9: Records

A master list is kept and the new utility billing software has fields to record the information for the service address.

Element 10: Reclaimed Water Requirements

We do not distribute or have facilities that receive reclaimed water.

8.6 RECORD KEEPING AND REPORTING

Water quality and compliance records are kept at the Public Works department in keeping with WAC 246-290-480. Some data such as operational, maintenance and customer complaints are noted for utility improvement and program purposes. Some operational records of the utility also fall under the local government general records retention schedule by the State Archives Office. As an indirect effort to reduce duplication and retention efforts, DOH has some analyses kept in their water system data base, Sentry Internet.

The requirements applicable to our system are summarized in Table 8.5 and in accordance with ODW Publication #331-431

TABLE 8.5 – RETENTION OF RECORDS

RECORD	RETENTION PERIOD	COUNTY DEPT.	REGULATORY AGENCY
Bacteriological Analysis	5 years	LCPW	DOH
Turbidity Analysis	5 years	LCPW	DOH
Chemical Analysis	As long as the system is in operation	LCPW	DOH
Lead and Copper	12 years	LCPW	DOH
Monitoring Plans (bacteriological and turbidity analyses)	5 years	LCPW	DOH
Monitoring Plans (chemical analysis)	10 years	LCPW	DOH
Records of Action Taken to Correct Violations	At least 10 years after the last action taken for that violation	LCPW	DOH
Records of Granted Variance or Exemption	5 years from date of expiration	LCPW	DOH
Sanitary Surveys (written reports, summaries, communication)	10 years after completed sanitary survey date.	LCPW	DOH
Stage 2 Disinfection Byproducts Rule			LCPW
• Initial Distribution System Evaluation reports	10 years	LCPW	DOH
• Monitoring Plans	As long as the corresponding	LCPW	DOH

	monitoring occurs. Keep the previous monitoring plan for 10 years.		
• Monitoring Results	10 years	LCPW	DOH
Chlorine Residual	3 years	LCPW	DOH
Public Notices	At least 10 years after issued	LCPW	DOH
Consumer Confidence Reports	3 years	LCPW	DOH
Water Treatment Plant Performance			
• Type and quantity of chemicals used	3 years	LCPW	DOH
• Amount of treated water	3 years	LCPW	DOH
• Results of analyses	3 years	LCPW	DOH
Capital Project Reports and As-Builts	Life of the facility	LCPW	DOH
Cross-Connection Control Records, WAC 246-290-490(8)			
• Master list of service connections or consumer's premises	Life of cross-connection hazard from premises	LCPW	DOH
• Inventory information of approved, installed backflow preventers	5 years	LCPW	DOH
• Backflow incident and annual summary reports	5 years	LCPW	DOH
Meter Readings for Usage	3 years	LC FISCAL	State Archives
Billing Statements	6 years	LC FISCAL	State Archives
Billing Summaries	6 years	LC FISCAL	State Archives
Billing Stubs	4 years	LC FISCAL	State Archives
Delinquent Account Lists	6 years	LC FISCAL	State Archives
Customer Account Adjustments	6 years	LC FISCAL	State Archives
Low Income/Senior Citizen Discount Applications	6 years 1 year (not approved)	LC FISCAL	State Archives
RECORD	RETENTION PERIOD	COUNTY DEPT.	REGULATORY AGENCY
Collection Agency Reports	4 years or completion of SAO report	LC FISCAL	State Archives
Uncollectable Account Lists	6 years	LC FISCAL	State Archives
Deposit Receipts	6 years	LC FISCAL	State Archives
Deposit Register	6 years	LC FISCAL	State Archives

LCPW = Lewis County Dept of Public Works
SAO = Office of the State Auditor

Records Retention Reminder

Public water system owners and operators must keep at their utility, or a nearby location, the following records for the minimum timeframes listed below:

- ☐ **Microbial and turbidity** analyses: **5 years.**
- ☐ **Chemical analysis (IOC, VOC, SOC and so on):** As long as the system is in operation.
- ☐ **Copies of monitoring plans: As long as the corresponding monitoring occurs. Keep replaced plans 5 years** for microbial and turbidity analysis and **10 years** for chemical analyses.
- ☐ **Records of action the system takes to correct violations**: At least **10 years** after the last action taken for that violation.
- ☐ **Copies of written reports, summaries or communications relating to sanitary surveys** conducted by the state, local health jurisdiction, or contracted third party: **10 years** after the sanitary survey is completed.
- ☐ **Records concerning a variance or exemption** granted to the system: **5 years** after the variance or exemption expires.
- ☐ **Copies of public notices: At least 10 years** after issued.
- ☐ **Copies of Consumer Confidence Reports: 3 years.**
- ☐ **Lead/Copper:** Keep original records of all sampling data and analyses, reports, surveys, letters, evaluations, and schedules for **12 years.**
- ☐ **Groundwater Rule:** Systems required to perform compliance monitoring must also keep:
  - Records of the state-specified minimum disinfectant residual: **10 years.**
  - Records of the lowest daily residual disinfectant concentration and records of the date and duration of any failure to maintain the state-prescribed minimum residual disinfectant concentration: **5 years.**
  - Records of state-specified compliance requirements for membrane filtration and parameters for alternative treatment: **5 years.**
  - Records of the date and duration of any failure to meet the membrane operating, membrane integrity, or alternative treatment operating requirements: **5 years.**
- ☐ **Stage 2 Disinfection Byproducts Rule:**
  - Initial Distribution System Evaluation (IDSE) reports: **10 years.**
  - Compliance monitoring results: **10 years.**
  - Compliance monitoring plans: As long as the corresponding monitoring occurs. Keep the previous monitoring plan for **10 years.**
- ☐ **Enhanced filtration and disinfection for surface water and GWI systems:** If your system is subject to the rule requirement in the first column of this table, you must keep the following.

Rule Requirement	Necessary records	Time records must be kept
Individual Filter Turbidity Requirements	Results of individual filter monitoring	**3 years**
Disinfection Profiling	Results of profiling (including raw data and analysis)	**Indefinitely**
Disinfection Benchmarking	Benchmark (including raw data and analysis)	**Indefinitely**

- ☐ **Enhanced Treatment for Cryptosporidium:**
  - Keep results from the initial round of source water monitoring and the second round of source water monitoring until **3 years** after bin classification for filtered systems, or a determination of the mean Cryptosporidium level for unfiltered systems for the particular round of monitoring.
  - Keep any notification to the state that the system will not conduct source water monitoring due to meeting the criteria for **3 years.**
  - Keep the results of treatment monitoring associated with microbial toolbox options and with uncovered finished water reservoirs for **3 years.**

If you were confused about how long to keep your records, you can start from this point forward based on the information in this document.

Our publications are online at https://fortress.wa.gov/doh/eh/dw/publications/publications.cfm

For people with disabilities, this document is available on request in other formats. To submit a request, call 800-525-0127. For TTY/TDD, dial 711.

November 2015
DOH 331-431
Revised

Health

8.7 WATER SHORTAGE RESPONSE PLANNING

Emergency response planning is an important element of water system reliability. Part of emergency response planning is the development of a Water Shortage Response Plan (WSRP) that outlines actions to take during various levels of water shortages. During minor shortages, only public information and voluntary conservation measures may be necessary; whereas, during extreme shortages, mandatory curtailment and rationing may be needed.

Having a WSRP provides us with an established plan on how to address shortages. It provides information to our customers on how to reduce water usage and expectations if the shortages become more severe.

Our WSRP is provided in Appendix I. The plan provides a four-stage approach to addressing a water supply shortfall event. Each stage provides an increasingly aggressive set of actions to take as the shortages become more severe. The four stages are:

1. **Advisory Stage.** We inform our customers that a water shortage may occur and encourage them to use water wisely.

2. **Voluntary Stage.** We implement supply-side actions and recommend voluntary actions to our customers to meet our demand reduction goals.

3. **Mandatory Stage.** We implement more aggressive supply-side actions and will limit or curtail certain retail water use activities.

4. **Emergency Stage.** If supply conditions worsen and the mandatory stage activities do not meet our demand reduction goals, we will implement emergency restrictions which may include rate surcharges.

The authority to implement the WSRP is given in Title 13 of the LCC with administration by the Director of Public Works.

9. DESIGN AND CONSTRUCTION STANDARDS

This chapter provides an overview of the Utility's design and construction requirements for new facilities.

9.1 PROCEDURES

Project review procedures vary with the level of complexity of the proposed project. As defined in WAC 246-290-125, there are exceptions to project report and document submittal to DOH. No DOH approval per WAC 246-290-125(1) is needed for installation of valves, fittings, meters and backflow prevention assemblies; hydrants; repair of a system with a component of similar capacity and material; and maintenance activities not contacting potable water. The Utility meets the criteria under WAC 246-290-125(2) and elects to not typically submit plans to WSDOH for new or replacement distribution mains.

Construction documents and plans prepared by the Utility will follow standards used in the Engineering Division of Lewis County Public Works; and will be approved for construction by the County Engineer.

All requests for water service associated by building permits, land development reviews, land use zoning changes, special uses and other activities needing water service follow county project review procedures. At this time, Lewis County issues building permits for projects in the water service area. This includes lands within the city limits and outside the city limits. There is coordination between the City and Lewis County for these activities because:

- A significant portion of our service area is on lands administered by the City;
- the City contracts with Lewis County for building permitting services (reviews, permitting and inspections) on properties within city limits;
- the City conducts enforcement of land development activities within city limits;
- All land use zoning changes must be approved by Lewis County; and
- Water service, an essential service, in the city is provided by Lewis County.

All development projects requiring or affecting water service are reviewed by the utility. As part of the county review process, the applicant completes a Public Water Availability Notification form. This form is administered by the Environmental Services division of Lewis County Health, and is forwarded to the utility for review if the project is in our service area. As mentioned in Chapter 8, a water use questionnaire is also required. Service capability is either approved with or without conditions, or denied. The general process is outlined below.

1. Applicant submits a written request for water service availability with a project description and land development application from the City or Lewis County. This request is on a Public Water Availability Notification form administered by the Environmental Services division of Lewis County Health. An estimate of water demand prepared by a professional engineer licensed in the state of Washington in civil engineering may be needed if the proposed development is not a single family residential project.

2. If the proposed project is within city limits, then it will be regulated by the City. City will request the applicant to complete the Water Availability Notification form and provide information as requested by the Utility.

3. Utility will review; provide a written response summarizing the requirements and conditions for water service; verify completion of requirements and conditions; and coordinate with other Lewis County departments and programs to ensure safe and reliable water service.

4. The Public Water Availability Notification form is approved ONLY if there is existing service capability and no need for water system improvements.

5. Water service will be provided once the Applicant completes construction with final approval by the local building official, submits a completed water service application and water use questionnaire, gets written approval by the local land development authority, completes all required conditions and pays all fees.

If the water system is not capable or there are special project conditions before the Utility can complete the Public Water Availability Notification form, then the Applicant and Utility will continue with the following process.

6. Applicant will submit an application for a developer extension or latecomer agreement with any requested information and payment of an administration fee.

7. Utility will review and provide a written response about denial, approval or conditional approval of the project.

8. If acceptable, the Applicant and the Utility will enter into a formal agreement with the Applicant to prepare and bear all costs to have the project comply with DOH requirements in WAC 246-290-125.

9. Applicant's engineer will prepare and submit plans and specifications to the Utility for review and approval. All plans and specifications shall be prepared by and bear the stamp of a qualified Professional Civil Engineer licensed in the State of Washington. Final plans must be accepted by the County Engineer prior to the start of construction.

10. Upon final approval of the construction drawings and submittal of required permits and fees, a pre-construction meeting will be held with the Applicant, construction contractors, utilities, regulatory agencies, Utility personnel, county inspector, DOH and other invited participants

11. Utility will issue written notice to proceed after the pre-construction meeting, approval of materials and approval of the project schedule.

12. During the construction of any water facility, the Utility will have an inspector present. The inspector will be a qualified representative for the Utility to report progress and any

variance from the construction documents to the Administrator and construction project engineer; to be present for all pressure tests, disinfection procedures and water quality sampling; and to coordinate any connections to the existing water system. Only Utility personnel are authorized to operate hydrants, install water meters, perform shutoffs and other work on utility owned facilities.

13. Utility will accept the completed project AFTER completion of construction is approved by the Administrator and County Engineer.

14. Utility can complete the Public Water Availability Notification form.

A completed Public Water Availability Notification from the Utility signifies that we have the capacity to supply water to the applicant's proposed place of use. Some additional approvals are needed from the applicant before water service can be provided.

Water service will be provided once the Applicant completes construction with final approval by the local building official, written approval by the local land development authority, completes all required conditions, submits a completed water service application and water use questionnaire, and pays all fees. The local land development authority is determined by whether the property to be served is within the city or in county lands.

9.2 CONSTRUCTION STANDARDS

The design and construction standards are contained in Title 13 Lewis County Code and in Appendix J.

10. IMPROVEMENT PROGRAM

This chapter describes the methodology used in developing the Utility's Capital Improvement Program (CIP), and presents the estimated costs and schedules for implementation using 6-year and 20-year planning horizons.

10.1 DEVELOPMENT

A list of potential projects to address water system needs and deficiencies was made. The projects were developed using information from Operations personnel; projections and analyses as discussed in earlier chapters of this WSP; and the 2010 WSP Amendment prepared for the City of Vader.

A review of the capital projects proposed in the 2008 WSP and 2010 WSP Amendment was made for completion status, and future need. Table 10.1 outlines the status.

TABLE 10.1 – PAST CIP PROJECTS

PROJECT #	DESCRIPTION	STATUS	
		Completed	Modified for 2015 WSP
SO-1	Intake Structure Evaluation		SO-1
ST-1	Reservoir Inspection	2013	
ST-2	Interior Reservoir Cleaning		ST-1
ST-3	Exterior Reservoir Coating		ST-1
ST-4	Additional Storage Reservoir		ST-2
TR-1	SR 506 Transmission Main Replacement	2012	
TR-2	Raw Water to Backwash Improvement	2012	
TR-2	Chartless Recorders	2015	
D-1	9th, B and D St Water Main Replacement	2012	D-6
D-2	A, 5th and B St Water Main Replacement	2012	
D-3	Park Rd, E, 10th and F St Water Main Replacement and Road Crossing	2012	
D-4	C St Alley, 6th and E St Alley Water Main Replacement	2012	
D-5	SR 506/7th St and A St Water Main Replacement Project		D-5
D-6	Leak Detection Survey	2011	
D-7	Bridge Deck Pipe Support Replacement		D-10
D-8	Enchanted Valley Water Main Replacement Project		D-2
D-9	C, 9th and E St Alley Water Main Replacement		D-6
D-10	E St Alley Water Main Replacement	2012	D-7
D-11	Main St and A St Alley Water Main Replacement		D-11
D-12	C St Alley, C and D St Water Main Replacement	2012	
M-1	Meter Replacement Program	2014	

The Utility completed many of the CIP projects in 2012 with the huge infusion of capital funding in 2010. The funds were from a CDBG grant and a DWSRF loan. The remaining CIP projects were evaluated and developed into new CIP projects.

A 20-year planning and implementation period was used. Projects of high priority were scheduled for implementation within the six-year planning horizon (2014-2020); and projects that serve anticipated growth or less critical to system operations were scheduled between the six-year to 20-year period (2020-2034). Projects that address current system needs were considered high priority. Where applicable, the timing of projects has been coordinated with other jurisdictional improvements in the right-of-way.

The CIP is the result of planning based on current information. It is possible that other projects may arise which are not identified in this WSP. These projects may come about for ensuring water quality, responding to hazard and emergency events, complying with new regulatory requirements, accommodating improvements proposed by other agencies or departments, and addressing unforeseen problems. Due to budgetary constraints or funding opportunities, some of the projects outlined in this chapter may be combined, deleted and re-scoped to optimize resources. These situations will affect schedules and budget; therefore, the Utility reserves the flexibility to reschedule and reevaluate utility CIP projects. Design and construction of CIP projects will follow the procedures summarized in Chapter 9.

Planning level cost estimates were developed for each project. Each project cost includes the following components:

- **Base Construction Cost** includes all labor, equipment and materials based upon unit construction costs from bid tabulations for recent and similar projects. The work, measure of payment and payment are based on WSDOT Standard Specifications.

- **Sales Tax** is calculated at 8% of the Base Construction Cost.

- **Construction Contingency** considers the uncertainties associated with estimates derived at the planning level; and it is calculated at 30% of the sum of the Base Construction Cost and Sales Tax.

- **Engineering** includes administration, permitting, design and all costs to prepare plans and specifications for bid; and construction management which includes inspection, administration, engineering, material review, testing, as-built drawings and all costs to ensure construction is complete from contract award to completion. For most projects, it is calculated at 25% of the Base Construction Cost.

A summary of the projects and cost estimates is provided in Table 10.2. The locations of CIP projects are shown in Figure 10.1. Detailed cost estimates are provided in Appendix K.

TABLE 10.2 – CIP PROGRAM				
PROJECT #	DESCRIPTION	PRIORITY	TOTAL ($)	CIP YEAR
ST-2	Additional Reservoir	6-YR	$717,000	2017
D-1	SR 506 West of Olequa Creek Water Main Replacement	6-YR	$107,900	2020
TR-1	Turbidimeters	6-YR	$3,000	2017
TR-3*	Comprehensive Electrical Survey	6-YR	$10,000	
TR-4	On-line Analyzer	6-YR	$6,500	2016
TR-5	SCADA System Improvements	6-YR	$20,000	2018
D-11	Pressure Reducing Valve Stations	6-YR	$18,900	2021
	6-YEAR CIP TOTAL		**$883,300**	
PRV-1	PRV Downstream of Node 116	20-YR	$2,459	
PRV - 2	PRV Upstream of Node 107	20-YR	$2,459	
TR-6	Leak Detection	20-YR	$4,000	
TR-7	Energy Audits	20-YR	$4,000	
ST-1	Reservoir Life Extension	20-YR	$266,800	
D-2	Firgrove Road, Enchanted Valley Drive South & Horseshoe Bend Water Main Replacements	20-YR	$107,900	
D-3	Enchanted Valley Water Main Replacements	20-YR	$737,900	
D-4	8TH Street Water Main Replacement	20-YR	$231,900	
D-5	7th Street Water Main Replacement	20-YR	$520,300	
D-6	9th and C Streets Water Main Replacements	20-YR	$153,000	
D-7	Annonen Road Water Main Replacement	20-YR	$87,200	
D-8	D and E Streets Water Main Loop	20-YR	$127,300	
D-9	Customer Shutoff Valves	20-YR	$154,200	
D-10	SR 506 Bridge Deck Pipe Support Replacement	6-YR	$11,000	
	20-YEAR CIP TOTAL		**$2,410,418**	

10.2 CAPITAL IMPROVEMENTS

The CIP reflects replacement and growth-related projects. Replacement and renewal projects deal with the replacement of existing and depreciated facilities. Growth related projects deal with system expansion and new customers.

ST-1 Reservoir Life Extension

The life of the existing 250,000-gallon welded steel tank can be extended with proper retrofitting and maintenance. The existing reservoir has not been recoated since it was constructed in 1979. The reservoir and clearwell were inspected by professional divers in July 2013. The inspection showed several areas in poor condition which could be recoated.

Welded steel tanks are inherently more resistant to seismic damage than bolted steel tanks so there is some value in recoating, retrofitting and improving the existing tank to extend its useful life. With proper care, the useful life of a welded tank is between 75 and 100 years.

This project would also include analysis and design of improvements to strengthen the structural integrity of the reservoir and to improve operational efficiencies.

ST-2 Additional Reservoir

An additional reservoir would replace the existing reservoir with one that meets current seismic code requirements, provide storage capacity for plant shutdowns and maintenance, improve system pressure for customers served in the immediate downstream vicinity of the plant and support a countywide network of safe potable water during declared disasters and emergencies. Lewis County received a CDBG Grant of $717,000 to add an additional reservoir, and has contracted with MSA to perform the design and construction engineering. This reservoir should be constructed in the summer of 2017.

D-1 SR 506 West of Olequa Creek Water Main Replacement

The 6" main on SR506 west of Olequa Creek had several leak repairs made in the last three years. The main is alongside SR 506 which is heavily used by logging trucks and large loaded vehicles. Several leaks have been found in the segment of the main crossing SR506 which could be prevented and easily repaired if a crossing conduit was used. Other irregularities noted in the repairs were absence of bedding material and improper connections. This project will also construct a segment of the existing main to make it more effective for service and to simplify operations.

D-2 Firgrove Road, Enchanted Valley Drive South and Horseshoe Bend Water Main Replacements

This project will improve system and fire pressures to the Enchanted Valley Drive area. The project will construct a 6" main to replace the existing 4" main on Firgrove Road to Enchantment Lane, 6" main to replace the existing 2" main on Enchanted Valley Drive South and 4" main to replace the existing 2" main on Horseshoe Bend. Multiple repairs on Horseshoe Bend found irregularities in the bedding material, pipe material, pipe connections, bedding materials and meter boxes.

D-3 Enchanted Valley Water Main Replacements

Water main replacement in this project area will vastly improve system and fire pressures to the Enchanted Valley water system. This area was developed in the mid-1960s and initially served by five wells and a pump station. The distribution lines were sized originating from the pump house but the wells were abandoned when the development purchased water from the City. However, some of the distribution mains were not improved to handle distribution from the water treatment plant.

The project will construct a 8" main from the plant to Little Pinto Court, Enchanted Valley Drive South and Enchanted Valley Drive North; 6" main on Spring Court, Olequa Place and Olequa Drive. The latter segment on Olequa Drive would be from about Park Place to Olequa Court. Information about the mains in this area are sketchy. Repairs made in this area found irregularities in the bedding material, trench separation of multiple utilities, service line

connections and meter box installations. This project will also include blowoff assemblies, hydrant assemblies and a sampling station. The sampling station would enable access to a downstream section of the prior Enchanted Valley Country Club system.

D-4 8th Street Water Main Replacement

This project will improve system pressure, efficiency and operations by constructing a new main on 8th Street from E Street to I Street; and connecting mains on E, F and G Streets from 8th to 9th Street. This project will loop three dead end mains.

D-5 7th Street Water Main Replacement

This project will replace about 4800 lf of existing AC mains along 7th Street, "A" Alley from 6th to 7th Streets, A Street from 7th to 8th Streets, and C Street from 8th to 7th Streets. This project is considered a "Developer Paid" project as it will primarily benefit undeveloped properties along and adjacent to 7th Street (also known as SR 506).

D-6 9th Street and C Street Water Main Replacements

This project will replace AC mains along 9th Street from B Street to E Alley, and on C Street from 8th to 9th Streets. Another element of this project is to improve an existing 2" service main on E Alley south of 9th Street to eliminate a dead end line. This project will remove about 1,250 lf of AC water main in the water system. The completion of projects D-5 and D-6 will completely remove all AC mains in the water system.

D-7 Annonen Road Water Main Replacement

The existing 2" main along Annonen Road will be replaced with a 4" main.

D-8 D and E Streets Loop

The existing 2" water service mains south of 6th Street on D Street, E Street Alley and E Street will be eliminated. The three dead end lines will be replaced with a new 8" water main that will extend northerly of 6th Street on E Street, westerly along 5th Street, and southerly on D Street to the existing 10" main at the intersection of 6th and D Streets. This new alignment will create some efficiencies and operational safety by moving some service meters from an alleyway, ridding deadend lines, and reducing main and service line lengths.

D-9 Customer Shutoff Valves

Customer shutoff valves behind the service meter boxes will provide another level of protection from potential cross connection. These valves will enable customers to isolate their premises from the water system.

D-10 SR 506 Bridge Deck Pipe Support Replacement

WSDOT informed the City in February 2007 that the utility hangers under the SR 506 Olequa Creek bridge were not adequate. However, WSDOT amended their determination after an inspection. WSDOT notified the City in 2007 that they will continue to monitor the integrity of the supports every two years. The estimate of the repair is based on work to be performed by WSDOT maintenance.

D-11 Pressure Reducing Valves

Two pressure reducing valve assemblies were installed and abandoned in the EVCC system. Construction of two pressure reducing valve assemblies will maintain constant pressure in the EVCC distribution mains, reduce likelihood of main breaks and prevent non-revenue water loss.

Treatment Efficiency Improvements

These projects entail development of strategies and implementation of improvements that aim to reduce operating costs to produce and distribute potable water to our customers. The improvements include detailed leak surveys, energy audits, studies, new construction, adaption of processes and procedures, retrofits, and upgrades (mechanical and programming) that will improve operational, technical, managerial and financial capabilities.

TR-1 Turbidimeters

The treatment process relies on turbidity readings from the turbidimeters. The existing turbidimeters were salvaged from the old plant when it was replaced with a mixed media filtration system in 2002. Parts are expensive and hard to find because this model is discontinued. DOH has put us in contact with a utility that is installing a multi-media treatment system and replacing their turbidimeters with laser reading technology. Installation of the new, used turbidimeters was completed in 2014.

TR-2 Chartless Recorders

The chart recorders for turbidities, chlorine residual, pH, raw water influent and finished water effluent are recorded on circular 24-hour charts. We believe these chart recorders pre-date the construction of the water plant in 2002 and were salvaged from the old plant. In any case, these chart recorder models are discontinued. Replacement to chartless recorders will enable instantaneous legible readings; longer storage of data; elimination of pens, paper and paper jams; PC data access; and Ethernet for remote access. – This improvement was accomplished in 2015

TR-3 Comprehensive Electrical Survey

There have been several repairs of plant and intake components since 2011. Many of these problems were associated with worn or faulty electrical relays and switches. These problems took a lot of resources to troubleshoot and correct. A comprehensive electrical survey of the system will help to proactively plan a replacement and improvement schedule, and improve documentation of the control system. *Due to the complexity of adding reservoir capacity to the system, this improvement will be completed as a part of the Additional Water Reservoir

TR-4 On-line Analyzer

The on-line analyzer continuously monitors temperature, pH and chlorine residual of the finished water. This unit is about 15 years old and should be replaced with one that has the capability to send an alarm for low chlorine residuals. Chlorine residual is monitored to ensure the correct *Giardia* inactivation level in the distribution system.

TR-5 SCADA System Improvements

Specific components of the SCADA system installed in 2002 are analog based. Some improvements are needed to convert to digital technology. A new human-machine interface would enable rapid awareness of alarm situations, quick and safe application changes, remote access, improve security, and reduce cost of operations. Cost reductions could be realized in operating supplies, telephone land line service, and personnel overtime.

TR-6 Leak Detection Survey

We will continue to implement measures outlined in Chapter 5 to reduce water loss volumes. A leak detection survey was conducted in August 2011 using sonic tests at contact points

throughout the system. In the event, loss volumes are not significantly reduced within five years of this WSP, another leak detection survey may be in order.

TR-7 Energy Audits

Energy efficient lighting was installed in the plant when we began management of the system in 2011. Some other areas of potential savings could be the motor and pumping systems in the intake building and heaters in the plant. An energy audit would identify, assess and plan measures and programs to improve efficiencies.

ID #*	DESCRIPTION
ST-1	Reservoir Life Extension
ST-2	Additional Reservoir
D-1	SR506 West of Olequa Creek Water Main Replacement
D-2	Firgrove, Enchanted Valley Dr S and Horseshoe Bend Water Main Replacements
D-3	Enchanted Valley Water Main Replacements
D-4	8th St Water Main Replacement
D-5	7th St Water Main Replacement
D-6	9th and C St Water Main Replacements
D-7	Annonen Rd Water Main Replacement
D-8	D and E St Loop
D-9	Customer Shutoff Valves
D-10	SR506 Bridge Deck Pipe Support Replacement
D-11	Pressure Reducing Valves
TR-1	Turbidimeters
TR-2	Chartless Recorders
TR-3	Comprehensive Electrical Survey
TR-4	On-line Analyzer
TR-5	SCADA System Improvements
TR-6	Leak Detection Survey
TR-7	Energy Audits

City Limits
Water Service Area
Water Treatment Plant
Storage Reservoir
Intake Structure

*Hydrant valves are NOT displayed on this map.

Shut-Off Valves*
Backflow Control
Blowoff
Pressure Reducer
Air Release
Hydrants
Sample Stations

10" Plastic
8" Plastic
6" Plastic
4" Plastic
2" Plastic
6" Transite
4" Transite

10" Ductile Iron
8" Ductile Iron
6" Ductile Iron
1" Galvanized
4" Unknown
2" Unknown
Unknown

City of Vader & Enchanted Valley Water System

LEWIS COUNTY GIS

0 250 500 1,000 Feet

N

This map is intended for informational purposes only. It should not be used for locating water system features. Locations of water system features are approximate and have been adjusted for cartographic purposes.

FIGURE 10.1
CIP PROJECT MAP

11. FINANCIAL PROGRAM

This chapter provides an analysis of the Utility's ability to fund operations, maintenance activities and capital improvements.

11.1 PAST FINANCIAL HISTORY

The financial statements of the county funds established for the utility were used to prepare revenues and expenditures since operation of the Utility on October 31, 2010. Table 11.1 summarizes the revenues and expeditions from 2010 to 2014.

The table is distinguished between two funding sources: operations from water sales and capital improvement projects from other sources. Lewis County was successful in obtaining two funding sources for a water system improvement project in 2010. These were the CDBG General Purpose Grant and DWSRF Loan. Completion of the two funding contracts will be finalized in 2015.

TABLE 11.1 – SUMMARY OF SIX-YEAR FINANCIAL HISTORY						
	FUND BALANCE ($)					
	2010* (Oct-Dec)	2011	2012	2013	2014**	2015
BEGINNING BALANCE	**$24,281**	**$49,473**	**-$25,872**	**-$1,367**	**$12,045**	**42,262**
REVENUE						
Water Sales	50,485	246,821	261,407	288,337	331,221	311,605
Transfer in from Debt Service Fund 211						**17,897**
TOTAL REVENUE	**$50,485**	**$246,821**	**$261,407**	**$288,337**	**$331,221**	**$329,502**
EXPENDITURES						
Operating Expenses						
• Labor & Benefits	15,328	154,571	129,640	167,622	142,348	147,050
• Materials & Supplies	848	33,733	12,831	13,214	6,214	9,261
• Utilities	2,187	12,324	13,188	12,531	15,094	12,137
• Equipment	2,181	14,420	12,900	18,936	19,705	17,430
• Training	0	977	414	1,230	3,646	2,646
• Operation Fees	4,001	696	3,850	1,422	13,465	5,730
• Services/Repairs	749	53,543	26,562	22,891	63,889	48,537
Total Operating Expenses	**$25,293**	**$270,264**	**$199,385**	**$237,846**	**$264,361**	**$242,791**
Debt Service	-	51,902	37,517	37,079	36,642	57,801
TOTAL EXPENSES	**$25,293**	**$322,166**	**$236,902**	**$274,925**	**$301,003**	**$300,592**
FUND BALANCE	**$49,473**	**-$25,872**	**-$1,367**	**$12,045**	**$42,262**	**$71,172**

CAPITAL IMPROVEMENT FUND						
Capital Revenue	5,313	170,720	1,056,832	66,472	12,676	
Capital Expense	5,313	170,720	1,056,832	66,472	12,676	
CAPITAL FUND BALANCE	**$0**	**$0**	**$0**	**$0**	**$0**	

* The 2010 revenue is as of 12/20/10 and reflects revenue incurred for Oct.-Nov. 2010 and due by January 5, 2011.
**The values for 2014 are a total of two funds. A county fund was set up when ownership was transferred in April 2014. See explanation in Section 11.1.

The year-end balances in Table 11.1 should be viewed with caution because the operating revenue for the year does not represent total water sales for a calendar year. We bill water usage bimonthly on even numbered months, which poses a problem because the bill does not show water usage for the calendar year end. For example, the water bill sent out in early February is for water usage incurred from December through January with payment due in early March. Water sales for the end of the calendar year are not realized until the first quarter of the next year.

Lewis County fiscal reports did not adjust water sales to reflect calendar year end usage, yet expenditures were captured and reported as representative of calendar year end expenses. This practice was done while the utility system was in receivership because the receivership period was assumed to be no more than a year. The fiscal budget and matters of the utility were kept separate during receivership as it was not yet a county revenue fund. However, with the transfer of ownership completed on April 30, 2014, county fiscal reports for the utility will be consistent with other county revenue funds.

Lewis County set up a new county revenue fund to use when transfer of ownership was completed on April 30, 2014. Fund balances from the receivership fund were transferred into the county revenue fund in 2014, thus the 2014 values for revenue and expenditures are unusually higher than normal.

Despite the different cutoff periods used in county reports for revenue and expenditures, the table shows that expenditures are exceeding water sales.

11.2 RATES

The current Utility rates are based on a monthly base charge and usage charge. Customers are billed every two months. Skip Rand from Rural Community Assistance Corporation (RCAC) provided his expertise in utility rate structuring and worked with Lewis County to help determine a range of rates representative to capture operating and maintenance costs, loan payments and reserve. The water system administrator determined the minimum revenue needed to successfully operate the water system, and Lewis County held several community meetings about the receivership process. Clarification was also made at these meeting that the water utility must pay for itself—there are no county funds to supplement the operation of the failing water system. County procedures are in place to borrow from the Treasurer but it is a loan with interest. The county used an interactive spreadsheet at the public work sessions to show several rate scenarios including: flat fee with variable usage throughout service area, flat fee inside and outside the city, base-and-usage rates throughout service area, and base-and-usage rates inside

and outside the city. was After much discussion and public input, it was generally agreed that a base rate plus -usage rate structure would be the appropriate structure for the water system.

Table 11.2 shows the monthly water rates used by the City of Vader and the Utility. To keep it simple, the Utility uses a base and usage rate structure throughout the service area. The old rate structure used a flat fee for up to 9,000 gallons bimonthly and extra usage at $0.20 per 100 gallons. The County water rates were approved in March 2011 and applied for water usage as of April 1, 2011. A copy of the current utility rates and fees is available in Appendix H.

TABLE 11.2 – MONTHLY WATER RATES

CUSTOMER CLASS	CITY OF VADER		LEWIS COUNTY UTILITY
	INSIDE CITY LIMITS*	OUTSIDE CITY LIMITS*	
Residential	$44.05	$40.05	$43.50 + $6.50/1000 gallons
Commercial	-	-	$43.50 + $6.50/1000 gallons
Churches	$40.05	$40.05	Considered *Commercial*
Non-Profit	$40.05	$40.05	Considered *Commercial*
Business	$44.05	$44.05	Considered *Commercial*
School	$44.05	$44.05	Considered *Commercial*
Senior/Low Income**	$23.50**	$23.50**	21.75 + $6.50/1000 gallons

*The City rate includes up to 9,000/2-months.

**The City low income limit was $11,000. The Utility uses current CDBG income limits.

11.3 DEVELOPMENT OF THE FINANCIAL PLAN

A financial plan was developed of projected revenues and expenditures. This six-year plan was made for 2015 to 2020 to demonstrate the Utility's ability to meet operational and improvement needs through the current rate revenue.

Successive budgets got better with each year of system operation. Specific operating expenses became known once major deferred maintenance, repairs and tasks were completed. With this knowledge, we could look for ways to improve efficiency and reduce costs.

Multiple main and service line repairs, deferred maintenance projects and cross training of county personnel were heavily undertaken in the first three years. The Utility was also operating the system under the receivership process with pending transfer of ownership which put some improvements on hold. Negotiations for the transfer of ownership were completed in February 2014 and the water utility came under County ownership on April 30, 2014.

Revenues

Revenue for the utility is primarily made up of water sales and water service fees for connection, hookup, shutoff and delinquent payments.

Expenses

Operation and maintenance expenses are comprised of personnel costs and benefits, utilities, materials and supplies, equipment, regulatory permit fees, loan payments and taxes. Our service area includes the City of Vader, and the City assesses a local utility tax on water, sewer and garbage utility services to each city customer regardless of City ownership. The Utility sends to

the City at every billing period the utility tax amount calculated at 7% of gross water sales in city limits.

11.4 FINANCIAL PROJECTIONS

A six-year financial plan was developed to show projected revenues, expenses and for capital improvement projects (CIP) for 2015 to 2020. The financial plan is to show the Utility's ability to meet operational and capital improvements through rate revenues.

The 2015 budget was used to start the six-year financial planning. Projections for revenue are based on the projected ERU demands outlined in Chapter 3 (Table 3.14) with the current number of approved connections used for 2015. The utility is currently approved for 369 connections and the 6-year projection shows an increase of 32 connections so an increase of 5-6 connections per year was used to project additional services at the existing rate structure. The projected connections are shown in the six-year financial plan as "additional services" revenue.

Operational expenses include a one to two percent cost of living and inflation adjustment for personnel and some services. No increased utility rates (for power and fuel) and operation fees (to DOH and Ecology) were used. In 2015, there were two outstanding debt payments to be made annually. In 2015, Lewis County started paying back a DWSRF loan for $722,000 which was half loan and half forgivable loan for the installation of 6,000 ft of pipe.

The CIP projects are taken from Chapter 10. The analysis in Chapter 10 differentiated between renewal and replacement, and growth-related projects. The CIP analysis shows that funding will need to be from several sources: rate revenues, grants, loans, bonds, developer contributions and special assessment districts. Section 11.5 describes funding sources that are available.

The six-year financial plan is summarized in Table 11.3. Projections for 2015 and 2016 are taken from the preliminary budgets either approved or under review by Lewis County. The remaining projections are made using the ERU trend summarized in Chapter 3, and anticipated expenses. If unusual requirements are known, it is used in the projections. For example, monthly analyses for total and dissolved arsenic are anticipated in 2016-2017 as part of our Water Treatment Plant General Permit issued by Ecology.

11.5 FUNDING SOURCES

The Utility has been effective in securing grant and loan funds for CIP. The Utility will continue to obtain external funding sources and build the CIP program. A brief description is provided of some potential funding sources that may be applicable to our CIP program.

Capital Facility Charges

The Utility will strive to fund some CIP projects from capital facility charges. Rates will be derived in an amount equal to or greater than the annual depreciation expense for the utility, and designated for specific projects.

Community Development Block Grant (CDBG)

CDBG is a state administered federal grant that funds eligible local governments for community development projects that principally benefit low- and moderate-income persons. All CDBG funded projects must meet one of the three national objectives: principally benefit low- and moderate-income persons; prevent or eliminate slums or blight; and meet urgent needs posing serious and immediate threat to public health or safety. The CDBG program is administered by the State Department of Commerce.

Drinking Water State Revolving Fund (DWSRF)

The Safe Drinking Water Act (SDWA) amended in 1996 established the DWSRF to make funds available to drinking water systems to pay for infrastructure improvements. WSDOH manages this loan funding program which is available to all community public water systems; and non-profit, non-community public water systems except federally owned and state owned systems. The loans are used to pay for capital improvements that increase public health and compliance with drinking water regulations.

The terms of the loan are generally one percent less than municipal utility revenue bonds and may extend up to 20 years.

TABLE 11.3 – PROJECTED SIX-YEAR FINANCIAL PLAN						
	2016	2017	2018	2019	2020	2021
BEGINNING BALANCE	$71,172	$55,542	$44,820	$31,537	$39,601	-$60,134
REVENUE						
• Water Sales & Fees	$300,000	$300,000	$300,000	$300,000	$300,000	$300,000
• Additional Services	4,586	9,936	14,521	19,871	24,456	29,042
• CIP Rate Revenue (% of annual $290K water sales)	0	$717,000 CDBG GRANT	$14,500	$14,500	$14,500	$14,500
• Miscellaneous	0	0	0	0	0	
TOTAL REVENUE	$304,586	$1,026,936	$329,021	$334,371	$338,956	$343,542
EXPENSES						
Operation Expenses						
• Labor & Benefits	$149,991 (2%)	$152,991 (2%)	$156,051 (2%)	$159,172 (2%)	$162,355 (2%)	$165,602
• Materials & Supplies	10,000	10,000	10,000	10,000	10,000	10,000
• Utilities	12,198	12,259 (2%)	12,320 (2%)	12,382 (2%)	12,443 (2%)	12,506
• Equipment	17,500	17,500	17,500	17,500	17,500	17,500
• Training	2,098	2,200	2,200	2,200	2,200	2,200
• Operation Fees	5,787	5,845 (1%)	5,904 (1%)	5,963 (1%)	6,022 (1%)	6,083
• Services/Repairs	49,508	50,498(2%)	51,508 (2%)	52,538 (2%)	53,589 (2%)	54,661
• Utility Tax 5.029%	16,113	16,396	17,405	17,688	17,931	18,173

Debt Service	50,522	49,970	49,417	48,865	48,750	48,366
Total-Operating Expenses	$313,716	$317,658	$322,304	$326,307	$330,791	$335,475
Capital Projects (CIP)						
ST-1, Reservoir Replacement		717,000				
D-1, SR506 west of Olequa Crk					107,900	
TR-1, Turbidemeters		3,000				
TR-4, online analyzer	6,500					
TR-5, SCADA Improvements			20,000			
D-11, PRV Stations						18,900
Total-CIP Expenses	$6,500	$720,000	$20,000		$107,900	
TOTAL EXPENSES	320,216	$1,037,658	$342,304	$326,307	$438,691	$354,375
FUND BALANCE	$55,542	$44,820	$31,537	-$39,601	-$60,134	-$70,967

Public Works Trust Fund (PWTF)

This loan program is set up by the Legislature to assist cities, towns, counties and special districts for different types of public works projects. The projects can include streets, roads, drainage, potable water and sanitary sewer systems. The funding emphasis is on replacement and repair of existing water and sewer systems.

The loans are issued on a sliding scale based on the repayment term. No local match is required for PWTF loans. Debt service coverage is not imposed on the PWTF loan.

Section 319 Grants

Ecology administers the Section 319 grants program to public entities and tax-exempt nonprofits. The program provides funding for nonpoint source pollution control activities such as groundwater/source water/wellhead planning and protection, lake restoration planning and implementation, riparian/wetland restoration planning and implementation, public outreach and education, total maximum daily load support, water quality monitoring, and watershed planning and implementation.

Revenue Bonds

The sale of revenue bonds is a common source of funding to construct major utility improvements. Debt service payments of the principal and interest are recouped from the utility's rate revenue and charges. A key benefit of revenue bonds is the exemption of federal income tax.

A determination of the utility's ability to repay debt is very important. A debt service coverage ration (total revenue less O&M and tax expenses, divided by the debt service payments requiring a coverage ratio) is calculated and the utility's finances are reviewed to determine if debt payments are feasible. Coverage ratios of 1.25 (25% more than the debt payment) are typical but coverage of 1.5 is a good financial target for planning purposes.

Utility Local Improvement Districts/Special Assessment Districts

Utility local improvement districts (ULID) and special assessment districts can be formed to fund projects that serve and benefit a limited service area. The costs of the improvements are borne only by the customers benefitting from these improvements.

Developer Contributions

Where possible, the Utility will leverage development related projects to have the benefitted parties pay for the costs of improved water service.

Infrastructure Assistance Coordinating Council (IACC)

The IACC does not provide direct funding but it is a non-profit organization that helps communities and tribes get resources to develop, improve and maintain infrastructure. The resources can be information, people, services and assistance (technical and financial) to eventually construct or implement the project infrastructure. IACC does this by:

- Sponsoring an annual statewide conference where state and federal programs assisting local governments and tribes with infrastructure needs convene to share information about their programs with local government representatives.
- Providing technical assistance to communities and tribes by bringing together the appropriate funding and technical assistance representatives with community members to collaborate on specific projects.

11.6 SUMMARY

This chapter summarizes the historical financial data for the utility since receivership to Lewis County in October 2010, and provides a projected financial plan with a rate transition plan. Although, we have been able to fund the water system operations, maintenance and improvements while maintaining a small fund balance, the actual operation and maintenance costs have been somewhat more than what was estimated in early 2010. This is primarily due to more repairs, problems and efforts than anticipated, personnel training and responses to meet changing regulatory compliance. All of these were anticipated challenges when we took on the utility, except for the breadth of each challenge. Another major unanticipated hitch was the constant replacement of equipment in the water plant which will be a challenge as the facilities near the end of useful life term, fail from years of neglected maintenance, become outdated by new technology and make compliance with regulatory requirements awkward and inefficient.

The financial plan shown in Table 11.3 best balances utility and customer needs. To assist with financial planning efforts, an interactive rate transition plan was developed and analyzed with different CIP schedules and proposed rate adjustments.

The required rate adjustments used in this chapter are not unusual, but it should be noted that the state of the current economy, and the closure of the local school in 2007 have affected growth in the service area. There is no major local employer and the service area has a low-moderate income population greater than 51%. While this plan estimates projected costs and revenues for the water utility, we will continue to monitor costs, improve operations, seek outside funding and adjust the plan as needed to ensure safe and reliable drinking water to our customers.

APPENDIX A

Water Facilities Inventory Form

Washington State Department of Health
Division of Environmental Health
Office of Drinking Water

WATER FACILITIES INVENTORY (WFI) FORM

ONE FORM PER SYSTEM

Quarter: 2
Updated: 04/13/2015
Printed: 5/14/2015
WFI Printed For: On-Demand
Submission Reason: Other

RETURN TO: Southwest Regional Office, PO Box 47823, Olympia, WA, 98504

1. SYSTEM ID NO.	2. SYSTEM NAME	3. COUNTY	4. GROUP	5. TYPE
90900 E	VADER-ENCHANTED VALLEY	LEWIS	A	Comm

6. PRIMARY CONTACT NAME & MAILING ADDRESS	7. OWNER NAME & MAILING ADDRESS	8. Owner Number 006075
JOHN J. STROM [WTPO 2] 2025 NE KRESKY AVE CHEHALIS, WA 98532	LEWIS COUNTY PUBLIC WORKS TIM ELSEA 2025 NE KRESKY AVE CHEHALIS, WA 98532	TITLE: DIRECTOR
STREET ADDRESS IF DIFFERENT FROM ABOVE	STREET ADDRESS IF DIFFERENT FROM	
ATTN ADDRESS 2025 NE KRESKY AVE CITY CHEHALIS STATE WA ZIP 98532	ATTN ADDRESS CITY STATE ZIP	

9. 24 HOUR PRIMARY CONTACT INFORMATION		10. OWNER CONTACT INFORMATION	
Primary Contact Daytime Phone:	(360) 740-1123	Owner Daytime Phone:	(360) 740-1123
Primary Contact Mobile/Cell Phone:	(360) 520-2433	Owner Mobile/Cell Phone:	(360) 269-5909
Primary Contact Evening Phone:	(xxx) xxx-xxxx	Owner Evening Phone:	(xxx) xxx-xxxx
Fax:(360) 740-1479 | E-mail: XXXXXX		Owner Fax Phone:	| E-mail: XXXXXX

WAC 246-290-420(9) requires that water systems provide 24-hour contact information for emergencies.

11. SATELLITE MANAGEMENT AGENCY - SMA (check only one)

- [x] Not applicable (Skip to #12)
- [ ] Owned and Managed SMA NAME: SMA Number:
- [ ] Managed Only
- [ ] Owned Only

12. WATER SYSTEM CHARACTERISTICS (mark all that apply)

- [ ] Agricultural
- [x] Commercial / Business
- [ ] Day Care
- [x] Food Service/Food Permit
- [ ] 1,000 or more person event for 2 or more days per year
- [ ] Hospital/Clinic
- [ ] Industrial
- [ ] Licensed Residential Facility
- [ ] Lodging
- [ ] Recreational / RV Park
- [x] Residential
- [ ] School
- [ ] Temporary Farm Worker
- [x] Other (church, fire station, etc.):

13. WATER SYSTEM OWNERSHIP (mark only one)

- [ ] Association
- [ ] City / Town
- [x] County
- [ ] Federal
- [ ] Investor
- [ ] Private
- [ ] Special District
- [ ] State

14. STORAGE CAPACITY (gallons): 310,000

15 Source Number	16 SOURCE NAME	17 INTERTIE	18 SOURCE CATEGORY									19 USE			20	21 TREATMENT					22 DEPTH	23	24 SOURCE LOCATION			
	LIST UTILITY'S NAME FOR SOURCE AND WELL TAG ID NUMBER. Example: WELL #1 XYZ456 IF SOURCE IS PURCHASED OR INTERTIED, LIST SELLER'S NAME Example: SEATTLE	INTERTIE SYSTEM ID NUMBER	WELL	WELL FIELD	WELL IN A WELL	SPRING	SPRING FIELD	SPRING IN	SEA WATER	SURFACE WATER	RANNEY / INF	OTHER	PERMANENT	SEASONAL	EMERGENCY	SOURCE METERED	NONE	CHLORINATION	FILTRATION	FLUORIDATION	IRRADIATION (UV)	OTHER	DEPTH TO FIRST OPEN INTERVAL IN FEET	CAPACITY (GALLONS PER MINUTE)	1/4 1/4 SECTION	SECTION NUMBER	TOWNSHIP	RANGE
S01	COWLITZ RIVER									X			X			Y		X	X			X		150		28	11N	02

WATER FACILITIES INVENTORY (WFI) FORM - Continued

1. SYSTEM ID	2. SYSTEM NAME	3. COUNTY	4. GROUP	5. TYPE
90900 E	VADER-ENCHANTED VALLEY	LEWIS	A	Comm

	ACTIVE SERVICE CONNECTIONS	DOH USE ONLY CALCULATED ACTIVE CONNECTIONS	DOH USE ONLY APPROVED CONNECTIONS
25. SINGLE FAMILY RESIDENCES (How many of the following do you have?)	0	350	348
A. Full Time Single Family Residences (Occupied 180 days or more per year)	350		
B. Part Time Single Family Residences (Occupied less than 180 days per year)	0		
26. MULTI-FAMILY RESIDENTIAL BUILDINGS (How many of the following do you have?)			
A. Apartment Buildings, condos, duplexes, barracks, dorms	0		
B. Full Time Residential Units in the Apartments, Condos, Duplexes, Dorms that are occupied more than 180 days/year	0		
C. Part Time Residential Units in the Apartments, Condos, Duplexes, Dorms that are occupied less than 180 days/year	0		
27. NON-RESIDENTIAL CONNECTIONS (How many of the following do you have?)			
A. Recreational Services and/or Transient Accommodations (Campsites, RV sites, hotel/motel/overnight units)	0	0	0
B. Institutional, Commercial/Business, School, Day Care, Industrial Services, etc.	15	15	26
28. TOTAL SERVICE CONNECTIONS		365	369

29. FULL-TIME RESIDENTIAL POPULATION

A. How many residents are served by this system 180 or more days per 920

30. PART-TIME RESIDENTIAL POPULATION	JAN	FEB	MAR	APR	MAY	JUN	JUL	AUG	SEP	OCT	NOV	DEC
A. How many part-time residents are present each month?												
B. How many days per month are they present?												

31. TEMPORARY & TRANSIENT USERS	JAN	FEB	MAR	APR	MAY	JUN	JUL	AUG	SEP	OCT	NOV	DEC
A. How many total visitors, attendees, travelers, campers, patients or customers have access to the water system each month?	1500	1500	1560	1560	1560	1650	1650	1650	1650	1500	1500	1500
B. How many days per month is water accessible to the public?	30	30	30	30	30	30	30	30	30	30	30	30

32. REGULAR NON-RESIDENTIAL USERS	JAN	FEB	MAR	APR	MAY	JUN	JUL	AUG	SEP	OCT	NOV	DEC
A. If you have schools, daycares, or businesses connected to your water system, how many students daycare children and/or employees are present each month?	10	10	10	10	10	10	10	10	10	10	10	10
B. How many days per month are they present?	30	30	30	30	30	30	30	30	30	30	30	30

33. ROUTINE COLIFORM SCHEDULE	JAN	FEB	MAR	APR	MAY	JUN	JUL	AUG	SEP	OCT	NOV	DEC
	1	1	1	1	1	1	1	1	1	1	1	1

35. Reason for Submitting WFI:

☐ Update - Change ☐ Update - No Change ☐ Inactivate ☐ Re-Activate ☐ Name Change ☐ New System ☐ Other _____

36. I certify that the information stated on this WFI form is correct to the best of my knowledge.

SIGNATURE: _____

DATE: _____

PRINT NAME: _____

TITLE: _____

WS ID	WS Name
90900	VADER-ENCHANTED VALLEY

Total WFI Printed: 1

APPENDIX B

WSP Review and Approval Documents

Such as

Consistency Review Approvals,

DOH: Pre-Plan Meeting documents, WSP comments & responses

Public meeting notes

Lewis County Resolutions/Approvals

STATE OF WASHINGTON
DEPARTMENT OF HEALTH
SOUTHWEST DRINKING WATER REGIONAL OPERATIONS
PO Box 47823, Olympia, Washington 98504-7823
TDD Relay 1-800-833-6388

February 11, 2016

Shirley Kook
Acting Utility Services Manager
2025 Northeast Kresky Avenue
Chehalis, Washington 98532

Subject: Vader – Enchanted Valley Water System, ID #90900E, Lewis County; Water System Plan, ODW Project #15-1106

Dear Ms. Kook:

Thank you for submitting the Water System Plan (WSP) for the above water system, received by the Office of Drinking Water (ODW) on November 13, 2015. We have reviewed the WSP in accordance with the pre-plan checklist, developed on December 3, 2013, and have the following comments that need to be addressed before ODW can approve the WSP update:

Chapter 1 – Water System Description

1. Page 18 and Figures 1-1 and 2-1, Retail Service Area (RSA). The text does describe the existing, retail, and future service areas; however, the maps only show the Water Service Area. In addition, the text refers to existing and future RSAs. **Please eliminate reference to future RSAs and use the standard terms of Retail Service Area, Existing Service Area, and Future Service Area. Also, the WSP needs to show the Existing Service Area, Retail Service Area, and Future Service Area as well as the Water Rights Place of Use. Please show all of these areas and label them accordingly, on one map or separate maps.** Please see the enclosed fact sheet called "Municipal Water Suppliers Service Areas in Planning Documents" (DOH Publication #331-432).
2. Figure 1-1, Service Area Map. **The map needs to include all of the Enchanted Valley service area.**

Chapter 2 – Description

3. Page 27. The Alum and Soda pumps are rated for 108 gallons per day (gpd), not gallons per minute (gpm) as shown. In addition, the polymer feed pump is rated for 60 gpd. **Revise Table 2.2, check remaining items on that list for consistency with the water diagrams and specifications from treatment plant reports.** We can provide you with copies of the reports we have upon request.
4. Page 26 and 27. The report states that flows over 100 gpm from the booster pump station (BPS) may compromise the AC water line, but the next page states that the water main was replaced with HDPE and the AC line is isolated. It is unclear whether this is a leftover statement from the older WSP, or if the old AC line is still in use and incapable of delivering higher flows. **Please clarify whether the line has been replaced and specify the actual flow rate.** If the flow is reduced, the actual performance value should be used in the limiting factor analysis, not the theoretical performance value. If the old AC pipe is the limiting factor, it should be listed on the capital improvement plan (CIP) to be replaced as soon as possible.

Chapter 3 – Planning Data and Demand

5. Page 39-41. The estimated system demands are not consistent with the data. The base 2014 demands for average day demand (ADD) and maximum day demand (MDD) in 2014 are reported in Table 3.14 as 54,232 gpd and

75,925 gpd respectively; however, the dataset on page 36 shows that these values should be 80,420 gpd for ADD and 126,200 gpd for MDD. This appears to be the result of either neglecting or under-estimating the impact of leakage. **Please revise the analysis so that projections match the data set, and re-evaluate peak hourly demand (PHD) with the revised MDD.**

6. Table 3.11 shows the non-revenue water increased drastically from 2012 to 2014 and almost doubled between 2013 and 2014. **Please explain the large increase in non-revenue water.**

Chapter 4 – System Analysis

7. Page 43 conflicts with page 26. Page 26 states that there are two pumps, with one pump the capacity is 100 gpm, with both pumps the capacity is expected to be 185 gpm; however, this flow has not been tested due to concern about AC pipes. Page 43 overlooks this, and states that the capacity is 100 gpm each pump, and that the total capacity is 200 gpm. Finally, during the sanitary survey performed in March 2015, the plant was noted to operate at 140 gpm. **Please confirm and revise these flows to be consistent and accurate with the actual capacity.** This conflict is also found in Table 4.5, pages 44, 47 and 48, and could be elsewhere in the WSP.

8. Pages 48 to 50 and Table 4.7. Upon re-evaluation of the PHD based on the MDD (see comment 5), and using the actual plant output determined (see comment 7), please revise the calculations for reservoir storage. **Please confirm that equalization storage is calculated using the actual plant operating conditions.**

9. Page 53 states that fire flows were determined from WAC 246-293-640. WAC 246-293-640 only sets minimum standards to be used in the absence of other information. Generally, local fire officials will determine actual requirements based upon local fire codes. Actual requirements will typically vary depending on housing density, planned use, occupancy, construction and other factors. **Consult the City ordinances and with the local fire marshal for guidance with respect to fire flow and requirements, hydrant spacing etc., or document that none is available for this area.**

10. Page 54, Summary of System Capacities. **The WSP needs to include information listed on Worksheet 6-1 and Table 6-1 of the Water System Design Manual (WSDM) showing the actual capacity of each element of the water system in Equivalent Residential Units (ERUs) and listing the limiting water system component.** See the enclosed Worksheet 6-1 and Table 6-1. **The total number of existing ERUs needs to be calculated by customer class, including a class for distribution system leakage (DSL) and non-revenue water.**

Chapter 7 – Source Water Protection

11. Page 69, Source Water Protection. The second paragraph should be modified to say that the LOW vulnerability rating by ODW is only with regard to Synthetic Organic Compounds (SOCs) since there is a low use of SOCs in Lewis County. The water shed is MODERATALLY vulnerable to Volatile Organic Compounds (VOCs). However, due to the abundance of roads and railroads within the water shed and in close proximity to the Cowlitz River, it would appear that the water shed should be rated as HIGH for vulnerability to potential contamination. The stated ratings by ODW are only for VOCs and SOCs and not for all potential contaminants.

Chapter 8 – Operation and Maintenance

12. Page 80, Section 8.4.1, Contingency Plan. The WSP refers to the Standard Operating Procedures (SOP) Manual. **Please provide ODW with a copy of this manual.**

13. Page 81, Table 8.3, Emergency Roster. **Please change the ODW Regional Engineer phone number to (360) 236-3030. This is our main office number and will be answered at the front desk during normal business hours.** The front desk will transfer to the Reginal Engineer for Lewis County, if available; otherwise, the call will be routed to another available Regional Engineer.

14. Page 83, Section 8.4.2, Vulnerability Assessment. Most elements of the emergency response plan should have language added to indicate that ODW be contacted. For example, debris flow, dam failure, flooding, earthquake, snowstorm, windstorms, vandalism, and contamination all warrant contacting ODW at a minimum to keep us apprised of the situation.

15. Page 88, Section 8.5.3, Program Elements. The Cross Connection Control Program (13.30.150 LCC) is missing from the code in the appendix. **Please provide this section.**

16. Page 92, Table 8.5. Some items do not match ODW Publication #331-431 (chemical analysis, monitoring plans, record of action to correct violations, and possibly other items). **Please align Table 8.5 with the enclosed ODW Publication #331-431.**

Chapter 11 – Financial Program

17. Page 105, Table 11.1, Summary of Five-Year Financial History. **Please explain the differences in tabulating Total Revenue.** For example, in 2014 only the Beginning Balance and Water Sales were added together to list Total Revenue.

    Debt Service for 2014 lists 36,642, but then jumps to 57,802 for 2015. Please explain this increase. Also, please provide an amortization schedule for the debt and annual debt service payments through the life of the loans.

18. Page 110, Table 11.3, Projected 6-Year Financial Plan. **Please explain the increase in water sales revenue from 2017 to 2018 and beyond, the CIP Rate Revenue, why the CIP projects are not included in the budget, and how the CIP will be funded.**

Appendix A

19. The Water Facilities Inventory (WFI) form needs to be updated to the current number of connections as listed on page 37 at 344 residential connections and it needs to be signed and dated.

Appendix B

20. Please provide copies of the public meeting notes and the Lewis County Resolution approving the WSP. Also, please include in the Appendix or WSP a copy of the Notice for Water Use Efficiency (WUE) Goal setting public forum and minutes from the public forum, a copy of the notice of the meeting of the consumers and minutes from that meeting, and a copy of the notice of the public hearing on the adoption of the WSP.

Appendix E

21. The Water Loss Control Action Plan (WLCAP) needs to be updated as it pre-dates the transfer of ownership of the water system to Lewis County. As set out in WAC 246-290-820(4) the WLCAP needs to include control methods necessary to achieve less than ten (10) percent leakage standard, an implementation schedule, and a budget that demonstrates how control methods will be funded. The County has made great strides in reducing DSL. However, many of the control methods listed in the WLCAP have been completed and the DSL is near 20 percent. Additional methods of control need to be listed in the WLCAP.

Appendix F

22. The Coliform Monitoring Plan (CMP) needs some slight modifications and it would be helpful to use the current template, which is enclosed and available on the ODW website at http://www.doh.wa.gov/Documents/Pubs/331-036_template.doc.

    There are four routine sites listed: X1 through X4. The CMP lists four repeat sites. However, one of the repeat sites must be the original coliform-present site. Please clearly show that for each routine site, that same site is also re-tested with the repeat sample set.

    The various routine sample sites and repeat sample sites are not labeled on the map. Please label each sample site.

Appendix J

23. The plans for the blow-off, air-vac, and below ground double check valves specify below grade equipment. All below grade equipment must be adequately drained to prevent submersion during heavy rains. Only the Double Check Detector Assembly drawing refers to drainage. This equipment should either be drained to daylight, or when that cannot be achieved, be installed above ground. **Please revise.**

Appendix K:

24. Distribution improvements estimate states that 8-inch PVC water main will be used, but standards state that 8-inch water mains shall be DI with cement coating. In other places, it is noted that HDPE is used (in the replaced water main from the intake). **Please clarify where PVC, HDPE, and DI are planned; also include specifications and installation standards for the PVC and HDPE line.**

Miscellaneous

25. **Please provide correspondence with any adjacent utilities and each local government with jurisdiction in order to assess consistency with ongoing and adopted planning efforts. See WAC 246-290-100(7).**

DEPARTMENT OF ECOLOGY

On November 23, 2015, a copy of this WSP was sent to the Department of Ecology (Ecology). Ecology has not issued comments on this WSP.

The Department's review of your WSP and design does not confer or guarantee any right to a specific quantity of water. Our review is based on your representation of available water quantity. If the Washington Department of Ecology, a local planning agency, or other authority responsible for determining water rights and water system adequacy determines that you have use of less water than you represent, the number of approved connections may be reduced commensurate with the actual amount of water and your legal right to use it.

We ask that you submit three copies of the revised pages of the WSP. Please respond to all comments in the plan. To expedite the review of the revised WSP, please summarize the response to the comments and where each response is located (for example, page numbers, appendices, and so on).

We recognize the significant effort and resource commitment involved in the preparation of this WSP. Thank you for your cooperation.

Regulations establishing a schedule of fees for review of planning, engineering, and construction documents were adopted April 30, 2012 (WAC 246-290-990). An invoice for $1,206 is enclosed.

If you have any questions, please contact Mark Mazeski at (360) 236-3038 or Jester Purtteman at (360) 236-3036.

Sincerely,

Mark J. Mazeski
Office of Drinking Water, Regional Planner

Jester Purtteman, P.E.
Office of Drinking Water, Regional Engineer

Enclosures

cc: Lewis County Health Department
Lewis County Planning Department
Tammy Hall, Department of Ecology

om: Mazeski, Mark J (DOH) <Mark.Mazeski@DOH.WA.GOV>
Sent: Wednesday, November 12, 2014 1:40 PM
To: Shirley Kook
Cc: Cherry, Janet G (DOH)
Subject: RE: City of Vader Pre-Plan Meeting

Thank you Shirley, I will update our files accordingly - Mark

From: Shirley Kook [mailto:Shirley.Kook@lewiscountywa.gov]
Sent: Wednesday, November 12, 2014 12:50 PM
To: Mazeski, Mark J (DOH)
Cc: Cherry, Janet G (DOH)
Subject: RE: City of Vader Pre-Plan Meeting

We anticipate the new submittal date to be in July 2015 because we want to use the 2014 data in the new WSP.

From: Mazeski, Mark J (DOH) [mailto:Mark.Mazeski@DOH.WA.GOV]
Sent: Thursday, September 25, 2014 3:19 PM
To: Shirley Kook
Cc: Cherry, Janet G (DOH)
Subject: FW: City of Vader Pre-Plan Meeting

Shirley,

Thank you for the phone call. I found where we had said 2013 data would be good data to use. Please see #5 below.

I just spoke with Janet and she said that it would be acceptable to use 2013 data for your ERU calculations as well. The 2013 data is more reflective of current conditions of your water system since you have been actively fixing leaks. Janet was pleased to hear that you plan to incorporate 2014 data as well.

As we discussed your current proposed submission date for your plan update was November 1, 2014. Since you want to include 2014 data in your plan update, and we agree that that is a good idea, we realize that your plan update will not be submitted until sometime in 2014. Please provide me with your new planned submittal date.

Thank you,
Mark

From: Mazeski, Mark J (DOH)
Sent: Friday, December 20, 2013 2:25 PM
To: Tim.elsea@lewiscountywa.gov; Shirley.kook@lewiscountywa.gov
Cc: Hayes, Corina M (DOH); Cherry, Janet G (DOH)
Subject: City of Vader Pre-Plan Meeting

Dear Tim and Shirley,

ank you for taking the time to meet with Janet, Corina and me on December 3, 2013 to discuss the Vader Water ystem Plan. As we discussed in the preplan, the plan should address all elements identified on the preplan checklist (attached). The plan should build on previous planning documents and clearly identify how the County intends to own,

operate and manage the system in a long term viable manner. As agreed upon during the preplan the plan should be submitted on or before November 1, 2014. Please contact me if you have problems meeting this submittal date.

Although this should be a comprehensive water system plan, please be sure to include the specific information below.

1. The service area map needs to include the existing, retail, and future service areas and identify your water rights place of use. These areas may be shown on a single map with each area clearly labeled or on separate maps.

2. As we discussed at the pre-plan meeting, the Plan itself does not have regulatory authority for such things as Cross Connection Control, shutting off water, establishing water rates, and water system design standards. Please provide or reference these ordinances or resolutions in the Plan.

3. Please review all Service area Policies to be sure that they meet County and City needs. For example, how are additional connections going to be allocated between those areas within City limits and those areas outside? Is the City interested in obtaining waivers of right to remonstrate to annexation from those new connections outside of City limits that do receive new water connections?

4. The Water Use Efficiency section needs to reflect the current requirements. Please summarize any past conservation efforts and develop a Water Loss Action Plan. Adopt goals and measures and provide documentation of goal adoption through a public process.

5. It was agreed that for the purposes of calculating system capacity, that the Water Loss data for 2013 could be used instead of using the average for the past 3 years. It was agreed that significant improvements have been put in place to permanently reduce water loss to the 2013 level. Raw water pumping rates should not assume more than 18 hours of operation in any 24 hour day.

6. We recommend that the County consider updating the hydraulic model.

7. How are fire flow standards going to be established in the water system service area? Please have the County Fire Marshal weigh in on issues regarding fire flow requirements and whether nesting will be allowed? Also include policies for new development on undersized water lines.

8. Review the current water system policies and determine if they still meet the needs of the system and the County. Also ensure the policies are in compliance with municipal water law requirements and address the system's duty to serve within their retail service area. (Describe how you will determine if you can provide services to new customers. What is your process for evaluating the system?)

9. Any agreements that have an impact on the water system should be included or referenced in the plan.

10. The WSP must include two Local Government Checklists (LGCs). One from the Planning and Zoning authority for the City of Vader and one from Lewis County. It was mentioned that the same person fulfils both of these functions. However, the WSP must include one LGC from each entity.

11. The plan should include a more detailed Watershed control plan that proposes efforts the County can take to provide additional protection to the watershed, especially for those areas below the Tacoma Power Dam to the water system intake.

12. The plan should discuss any Standard Operating Procedures the County has or intends to put into place to address operational concerns.

We also discussed the topic of an ordinance to limit individual property owners from drilling their own well instead of hooking up to the Vader water system? This is not a requirement but may be of interest to the County. Please see the

attached Pacific County Ordinance as an example:
http://www.co.pacific.wa.us/ordres/BOH%20Ordinance%20No%20%208%20Adopted%20Jan%2011%202011.pdf

'ease let me know if you have any questions. Feel free to call or e-mail me, if you have questions while you are working on the plan.

Thank you again,

Mark

Mark J. Mazeski, Regional Planner
Washington State Department of Health
Office of Drinking Water, Southwest Regional Office
Phone: (360) 236-3038 Email: mark.mazeski@doh.wa.gov
243 Israel Road S.E., Tumwater, WA 98501
P.O. Box 47823 (MS: 47823), Olympia, WA 98504
Web site: www.doh.wa.gov/ehp/dw

-- Public Health: Always working for a safer and healthier Washington --

Department of Health, Office of Drinking Water
Southwest Drinking Water Operations
Pre-Plan meeting

Water System: City of Vader

Date: Pre-Plan - December 3, 2013

Water System Plan Expiration Date: October 27, 2014

Operating Permit Color: Green

Water System Plan Submittal Date: November 1, 2014

The purpose of this Pre-Plan is to:

1. Determine the scope and level of detail of the WSP plan.
2. Establish a schedule for submittal of the WSP plan.

Water System Plan Format:
The following sections refer to information that needs to be included in the WSP and provides a proposed outline. You may choose a different format, but all of the elements identified below must be included.

Water System Plan (WSP) Checklist

	Required	*Content Description*	*WSP Page #*
Chapter 1		**Description of Water System**	
	(√)	Updated WFI, signed and dated	_____
	(√)	Ownership and management *Please provide an overview of the County's management structure.*	_____
	(√)	System history and background *Existing history in "08" and "10" plans plus discussion on the process by which the County took over operations. Include explanation of taking over and incorporating the Enchanted Valley County Club system into the City's system. (This should not be a big focus of the Planning effort.)*	_____
	(√)	Inventory of existing facilities *Please include all of the recent changes that have occurred since the last plan.*	_____
	(√)	Description of and discussion about related plans: groundwater management, basin (WRIA), and City/County land use plans & zoning. ***The 2010 Plan Amendment has very good zoning mapping.***	_____
	(√)	**Service Area Maps: clearly identifying existing, retail and future service areas.** ***This is often missing from first submissions, but is a very important element of a WSP.*** *These maps or map should clearly show the existing, retail, and future service areas and water rights place of use. This can be depicted on one map if properly labeled.*	_____

	(√)	**Policies: Service area, conditions of service, annexation** *What new ordinances and policies did the County adopt for management of the water system?* *What ordinances apply outside of City Limits/inside of City Limits?* *Are new connections available to anyone outside of city limits? What are the procedures for obtaining service?* *Is there a requirement to sign a waiver of right to remonstrate for annexation to the City? How does the County determine that the system has capacity?*	_____
	(√)	Duty to serve requirement: procedures, conditions, appeals *Discuss the procedures for how the water system will determine that they meet the duty to serve requirement. Also include an appeals process for conflicts that arise out of conflicts over "duty to serve". See Fact Sheet (DOH 331-366).*	_____
	(√)	Consistency from local planning agency (LGC checklist) *Please obtain two LGC checklists, one each from the City and County Zoning Authorities.*	_____
Chapter 2		**Planning Data**	
	(√)	Demand analysis based on water use	_____
		• Include analysis of population, service connections & ERUs	_____
		• Source and service meter data (preferably three or more, typically 6 years). Provide monthly and annual production and consumption totals.	
		• Provide usage by customer class. Analyze industrial and commercial demands separate from the residential demand and multifamily structures separate from the single family residences.	
		• Define ERU	
		• Provide data and assumptions (including DSL) for calculating MDD, PHD and ADD	
		• Demand analysis for the whole system	
	(√)	Provide 6 & 20 year projections for population, service connections, & ERUs	_____
		• Provide 6 & 20 year projections for demand forecasts with and without expected efficiency savings (conservation)	_____
	(√)	Provide 6 & 20 year projections for land use and zoning	_____
	(√)	Distribution System Leakage percentage and volume	_____
Chapter 3		**System Analysis**	
	(√)	Provide assumptions and basis of analysis	_____
		• System design standards	
		• Policies on operations and expected level of service (such as standby storage, pumping restrictions and emergency back-up power)	
		• Fire flow requirements and if nesting is allowed. May need a confirmation from the local fire authority. *Who provides Fire protection in the City limits of Vader/outside of City limits? What happens with sub-standard lines with regard to fire flow?*	

	(√)	System inventory and description ***Probably fairly complete. Just need to update with recent improvements and remove description of intertie with EVCC.***	_____
	(√)	Capacity analysis (legal and physical capacity) • Limiting factor analysis (WSDM worksheet 6-1) • Analysis per pressure zone and the whole system • **Water rights analysis- include water right self-assessment forms for existing, 6 & 20-year projections, including copies of water right certificate(s)** • consider source, pumping, treatment, storage, and distribution	 _____ _____ _____ _____ _____
	(√)	Hydraulic analysis of distribution system. ***This likely needs to be updated from old plans.*** • Describe the model used • Evaluate the system based on PHD and MDD + Fire flow • Evaluate the current conditions, and 6- and 20-year planning periods • Check minimum pressures and maximum velocities • Include assumptions of model, pressure zone boundary conditions, and a summary of model input information. Storage assumptions should be based on minimum reservoir levels. • Include verification and calibration methods and results. • Summary of system deficiencies	_____ _____
	(√)	Analysis of possible improvement projects	_____
Chapter 4		**Water Use Efficiency Program** ***This chapter will require changing to follow the WUE program as opposed to the old Conservation Program in past plans.***	
	(√)	Water Use Efficiency (WUE) Program per WAC 246-290-810 • Describe the current WUE program • Describe WUE goal & document public adoption process *You can use DOH website for public meeting publication. There is a link on the DOH WUE webpage.* *http://www.doh.wa.gov/CommunityandEnvironment/DrinkingWater/WaterSystemDesignandPlanning/WaterUseEfficiency.aspx* *Please provide copies of public notices and meeting minutes. Please provide direct notice to customers, for example insert notice in billing statement. This can be a combined public meeting to discuss WSP with customers and discuss WUE.* • Describe measures that will be implemented to achieve the goal & include schedule & costs in the budget • Describe process used to evaluate the WUE measures you did not implement • Describe yearly consumer education • Estimate projected water savings from selected measures • Describe process that will be used to determine effectiveness of the program	_____
	(√)	Source & Service Meters - or schedule w/activities to minimize leakage	_____
	(√)	Water Loss Action Control Plan WAC 246-290-820	_____

	(√)	Water supply characteristics, description & discussion on effect of water use	_____
	(√)	Source of supply analysis and evaluation of supply alternatives	_____
Chapter 5		**Source Water Protection**	
	(√)	Analysis and discussion of Water Quality	_____
	(√)	Watershed control program *See WAC 246-290-668 Recommendation is to speak with Tacoma Power to get info on high volume releases/turbidity. Primary focus should be on area below the dam to the water system intake. We also recommend that you work with the railroad on emergency response plans.*	_____
Chapter 6		**Operation and Maintenance Program**	
	(√)	Water system management and personnel	_____
	(√)	Operator certification	_____
	(√)	Routine operating procedures and preventive maintenance *Please discuss the SOPs. Where does re-lining reservoir fit into the budget?*	_____
	(√)	Water quality sampling procedures & program.	_____
	(√)	Coliform monitoring plan, including maps *Please use 2013 updated guidance and sample.*	_____
	(√)	Emergency response plan • Water system contacts *This is often provided in a table form which makes it easy to use in cases of emergencies.* • Vendor Contacts (Equipment replacement, water haulers, etc.) • Example notices (water outages, BWA, coliform MCL, emergency conservation) • Emergency government officials contact info (ODW, TCEH, State and County Emergency Operations Centers) • List of emergency sources and interties • Emergency response planning activities to ensure preparedness	_____
	(√)	Water shortage plan and service reliability per WAC 246-290-420	_____
	(√)	Cross-connection control program *How is this being implemented? How many backflow devices have been installed? Does the County have its own CCC Ordinance or is it using the City's program?*	_____
	(√)	Recordkeeping, reporting, and customer complaint program	_____
	(√)	Summary of O&M deficiencies	_____
Chapter 7		**Distribution Facilities Design and Construction Standards**	
	(√)	• Standard construction specification for distribution mains *- Does the County intend to use the City's construction standards found in Appendix E of 2008 plan or use County standards?*	_____
Chapter 8		**Improvement Program**	
	(√)	Capital improvement schedule for 6 and 20 years • Include inventory and assessment of existing system components *Please show an inventory of activity (projects) since last plan. We will want to see an O & M Capital Improvement Plan (CIP) that*	_____

		shows projects that need to be done; include turbidity meters at water treatment plant and lining reservoir.	
Chapter 9		**Financial Program**	
	(√)	<1000 connections – Balanced 6-year budget - See WAC 246-290-100(4)(j)set out below (j) Financial program, including demonstration of financial viability by providing: (i) A summary of past income and expenses; (ii) six-year balanced operational budget for systems serving less than one thousand connections; (iii) A plan for collecting the revenue necessary to maintain cash flow stability and to fund the capital improvement program and emergency improvements; and (iv) An evaluation that has considered: (A) The affordability of water rates; and (B) The feasibility of adopting and implementing a rate structure that encourages water demand efficiency.	_____
Chapter 10		**Miscellaneous Documents**	
	(√)	Meeting of the consumers (may be combined with WUE public meeting). • Date, agenda, meeting minutes	_____
	(√)	County/Adjacent Utility Correspondence	_____
	(√)	Agreements: franchise, wheeling, mutual aid, inter-local and other agreements (if any exist)	_____
	(√)	Documentation that WSP has been adopted by the Board of County Commissioners.	_____

Submittal Process

Here are some items the Office of Drinking Water (ODW) must have with your submittal:

1. A complete Water System Plan Submittal Form, current Water Facilities Inventory Form (WFI) signed and dated along with existing, 6 and 20 year Water Rights Self-Assessment Forms.
2. Three (3) copies of the WSP are required – two for ODW use and one to be routed to the Department of Ecology (Ecology).
   - Three-ring binders are preferable to comb binders as it allows for page revisions to be added in the draft.
   - Tabbed chapters are preferred for ease of review.
3. ODW will complete the WSP review within 90-days from the date of complete submittal.
   - ODW will conduct a detailed review and if necessary, issue a comment letter.
   - If the system is not responsive to our comments, the project can be cancelled and returned to the purveyor.

Washington State Department of Health
Division of Environmental Health
Office of Drinking Water

Local Government Consistency Review Checklist

Water System Name: VADER-ENCHANTED VALLEY PWS ID: 90900E

Planning/Engineering Document Title: 2015 WSP Plan Date: 5/2015

Local Government with Jurisdiction: LEWIS COUNTY

WAC 246-290-108 Consistency with local plans and regulations:
Consistency with local plans and regulations applies to planning and engineering documents under WAC 246-290-106, 246-290-107, and 246-290-110(4)(b (ii).

1) Municipal water suppliers must include a consistency review and supporting documentation in its planning or engineering document describing how it has addressed consistency with **local plans and regulations**. This review must include specific elements of local plans and regulations, as they reasonably relate to water service as determined by Department of Health (DOH). Complete the table below and see instructions on back.

Local Government Consistency Statement	Page(s) in Planning Document	Yes – No – Not Applicable
a) The water system service area is consistent with the adopted land use and zoning within the applicable service area.	18, 31, Figure 3.1	yes
b) The six-year growth projection used to forecast water demand is consistent with the adopted city/county's population growth projections. If a different growth projection is used, provide an explanation of the alternative growth projection and methodology.	32-35	yes
c) Applies to cities and towns that provide water service: All water service area policies of the city or town are consistent with the utility service extension ordinances of the city or town.	NA	N/A
d) Service area policies for new service connections are consistent with the adopted local plans and adopted development regulations of all jurisdictions with authority over the service area [City(ies), County(ies)].	18	yes
e) Other relevant elements related to water supply are addressed in the water system plan, if applicable; Coordinated Water System plans, Regional Wastewater plans, Reclaimed Water plans, Groundwater Area Management plans, and Capital Facilities Element of Comprehensive plans.	19	yes

I certify that the above statements are true to the best of my knowledge and that these specific elements are consistent with adopted local plans and development regulations.

K Witherspoon 5/28/2015
Signature Date

Karen Witherspoon, Senior Project Planner, Lewis County
Printed Name, Title, & Jurisdiction

Health

Local Government Consistency Review Checklist

Water System Name: VADER-ENCHANTED VALLEY PWS ID: 90900

Planning/Engineering Document Title: 2015 WSP Plan Date: 5/2015

Local Government with Jurisdiction: CITY OF VADER

WAC 246-290-108 Consistency with local plans and regulations:
Consistency with local plans and regulations applies to planning and engineering documents under WAC 246-290-106, 246-290-107, and 246-290-110(4)(b (ii).

1) Municipal water suppliers must include a consistency review and supporting documentation in its planning or engineering document describing how it has addressed consistency with **local plans and regulations.** This review must include specific elements of local plans and regulations, as they reasonably relate to water service as determined by Department of Health (DOH). Complete the table below and see instructions on back.

Local Government Consistency Statement	Page(s) in Planning Document	Yes – No – Not Applicable
a) The water system service area is consistent with the adopted land use and zoning within the applicable service area.	18, 31, FIG. 3	OK
b) The six-year growth projection used to forecast water demand is consistent with the adopted city/county's population growth projections. If a different growth projection is used, provide an explanation of the alternative growth projection and methodology.	32-35	OK
c) Applies to cities and towns that provide water service: All water service area policies of the city or town are consistent with the utility service extension ordinances of the city or town.	N/A	OK
d) Service area policies for new service connections are consistent with the adopted local plans and adopted development regulations of all jurisdictions with authority over the service area [City(ies), County(ies)].	18	OK
e) Other relevant elements related to water supply are addressed in the water system plan, if applicable; Coordinated Water System plans, Regional Wastewater plans, Reclaimed Water plans, Groundwater Area Management plans, and Capital Facilities Element of Comprehensive plans.	19	OK

I certify that the above statements are true to the best of my knowledge and that these specific elements are consistent with adopted local plans and development regulations.

Kenneth D. Smith — Signature

June 22, 2015 — Date

Kenneth D. Smith Mayor, Vader — Printed Name, Title, & Jurisdiction

LEWIS COUNTY UTILITY

VADER-ENCHANTED VALLEY WATER SYSTEM

INFORMATION MEETING

JANUARY 19, 2016

1. INTRODUCTION

2. UTILITY OVERVIEW

3. WATER SYSTEM PLAN

4. NEW TANK

LEWIS COUNTY UTILITY
INFORMATION MEETING ABOUT THE
VADER-ENCHANTED VALLEY WATER SYSTEM
JANUARY 19, 2016

SIGN-IN SHEET

NAME	ADDRESS	PHONE NO./EMAIL
STEVE KROHN	720 MAIN ST	295-3749
Don Schoffman	133A Fingrove Rd	295-0838
Scott Stevens	155 Firgrove	295-3885
Linda Smith		295 4002
Andy Wilson	418 MAIN St	295-3811
Judi Costello	709 A St	295-3036
Tim Elsea	LCPW	
Shirley Kook	LCPW, Engineering	
John Strom	LCPW, Utility Operator, Area 3	
Fred Terry	LCPW, Area 3 Rd Supervisor	

January 19, 2016

Vader-Enchanted Valley Water System Plan Meeting

Notes from the Vader/Enchanted Valley Water System Plan Informational meeting held at Vader City Hall 1-19-16.

Meeting Started at 6:00 pm, adjourned at 6:45.

Six members of the public (including 2 council members Andy Wilson and Judy Costello) attended.

Shirley Kook gave a comprehensive presentation about the proposed water system plan, and discussed the water use efficiency goals.

Judy Costello asked a question concerning the water rates and whether the Water System Plan would make the rates go up. – Tim Elsea explained that though the Water System Plan addressed the future need for additional revenue, the Plan in itself would not make the rates go up. That would be done through a Public Process in front of the Board of County Commissioners.

Judy expressed her sentiment that the County did a good job running the water system.

CRIME STOPPERS

Crime Stoppers of Lewis County and the Lewis County Sheriff's Office are seeking your assistance with a theft investigation which occurred in the 500 block of Silverbrook Road, in Randle. On December 16th around 6PM, suspect(s) stole a chainsaw from the back of a pickup parked at the school.

- Stihl MS661C Chainsaw, with double guards

Total loss amount: $1,300

They are also seeking your assistance with a burglary investigation which occurred in the 2800 block of Harrison Ave. in Centralia. On December 8th around 11:29PM suspect(s) made forcible entry by breaking a window into a business, stole a $100 bill, and caused damage to the building.

Total loss amount estimated at: $1,000

Your assistance is also need in a burglary investigation which occurred in the 400 block of Reinke Road in Centralia. Between November 23rd and December 15th, suspect(s) forced entry to the residence and stole the items below:

- 2 gas cans
- 2 propane tanks
- Push lawn mower
- Miscellaneous household items

Total loss amount estimated at: $1,000

If you have information about the location of any of the stolen property or the people responsible for stealing it, DON'T DELAY! CALL RIGHT AWAY!! Crime Stoppers will pay up to $1,000 for Information leading to the clearance of this crime or any other crime. Call CRIME STOPPERS at 1-800-748-6423 or report online at www.lewiscountycrimestoppers.org. Remember, you never have to leave your name!!!

EMT Calls

Dec 20, 2015 – Jan 3, 2016

Lewis County Fire District 2 (Toledo)
Incidents – 33
Basic Life Support Patient Transports – 11
Advanced Life Support Patient Transports – 06
Refusal Non Transport EMS – 11
Fire Incident – 03
Public Assist – 01
Alarm system – 01
Cancel – 00

Cowlitz Lewis Fire District 20 (Vader/Ryderwood)
EMS Incidents – 08
Basic Life Support Patient Transports – 03
Advanced Life Support Patient Transports – 02
Refusal Non Transport EMS – 03
Cancel – 02

Lewis County Medic One (Toledo, Winlock, Vader, Ryderwood, Napavine, Onalaska, Salkum)
EMS Incidents – 65
Basic Life Support Patient Transports – 15
Advanced Life Support Patient Transports – 33
Refusal Non Transport EMS – 16
Cancel – 01

Vader-Enchanted Valley Water System

Lewis County Public Works will host a meeting to discuss the proposed water system plan.

WHEN: Tuesday, January 19, 2016
TIME: 6:00 P.M.
WHERE: Vader City Hall, Vader, WA

If you have any specific questions regarding this meeting, please contact the Lewis County Public Works office at 740-2660.

ROSSETTI

Continued from page 1

to save the seeds, how to pick the fruits and vegetables and how to prepare the food. There is so much great stuff you can do in a school garden and it's great to watch all of that. But they have to do all of that stuff outside of their regular teaching time because that does not meet the SBAC (Smarter Balanced Assessment Consortium) standards."

"I just think that needs to stop," he said. "We really need to get down to the root that teaching kids is teaching kids and that is not a standardized box that we put people in. It is how they learn best, meeting each kid where they are at. And that is the important thing of getting kids educated and moving on to be successful."

When asked about the shortage of programs geared towards special needs and gifted students in the District Rossetti responded, "So all of this comes down to how we finance education."

"The fact is the schools in Seattle and Bellevue are able to tax at a larger tax rate," he stated. "And basically accumulate more money through their levies than us out here in the rural areas. So I think we need a fairer tax system to equalize the playing field so that schools in our rural communities are able to educate kids at the same level that kids in Seattle and Bellevue and other urban areas are receiving their education at. So that would fix all of these problems in my opinion."

Creating smarter happier children

One step in protecting children at school is to discourage violence and bullying in the schools according to Rossetti. "We really need to be promoting everyday positive mental outlooks on life," he said. "I think that the biggest thing that we can do on a daily basis is remind kids how unique they are, that having a positive outlook is huge and keeping mental health in good condition. I think that those areas will decrease what we are seeing as the negative stuff going on in our societies."

"In Longview, what we are finding that is working well is that we focused our efforts into putting a mental health counselor in all the elementary schools," he stated. "Because one of the things that I noticed when I came on board as a school board member is that we kind of do some mental health counseling up in the high school levels, even less in the middle schools and we had almost none in the elementary schools."

Rossetti went on to explain that in his opinion it is best to combat mental issues and behavioral problems early in a child's development. The idea is to give young children the help they need so that they do not have so many issues when they are older. That way society does not have to work so hard when the children are older.

Rossetti also explained that the state has worked on some mandates for curriculum in schools that focus on anti-bullying. Schools that have tested the programs have liked the results making the school a safer and better environment for children.

"The pet project that I have is figuring out a way to fully fund basic education at a state level," said Rossetti. "I think that is everyone's priority. I want to see us get out from underneath our Supreme Court Order, Contempt Order, and fully fund basic education as a state."

He said, "I have some ways to do that, but I'm just a Freshman Legislator; I don't know if all my great ideas will pass in my first year. But that is definitely my priority."

Thank You

"I'm honored for the privilege to serve otherwise I'm just excited to do my part in this next session," Rossetti said. "I want to make sure that my office doors are open for everybody. I'm accessible and I'm willing to be accessible to anyone who wants to reach out."

If you have any questions, comments, concerns for Representative Rossetti he is available by mail, phone and email.

Representative JD Rossetti
334 John L O'Brien Building
PO Box 40600
Olympia, WA 98504

Phone: 360-786-7806

Email:
JD.Rossetti@leg.wa.gov

"They can come in to visit," he said. "I want to hear what people have to say."

RECYCLE

YOUR CHRISTMAS TREES, HOLIDAY LIGHTS & STYROFOAM!

Dec. 26 thru. Jan. 10, 2016

10 a.m. to 4 p.m. Sun.-Fri. & 9 a.m. to 4 p.m. Sat.
Lewis County Central Transfer Station
1411 S. Tower Avenue, Centralia

Please...REMOVE ALL DECORATIONS & TINSEL

NO FLOCKED OR ARTIFICIAL TREES WILL BE ACCEPTED.

We reserve the right to refuse trees that do not comply. You may dispose of flocked, artificial or decorated trees at the transfer station where regular fees will be charged ($10 minimum for 200 pounds or less). Wreaths must be free of ribbon, wire and decorations. No trees or wreaths from commercial operations will be accepted. Thank you for your cooperation.

Styrofoam must be clean, dry, free of all tape and labels.
Items that do not comply cannot be accepted.

Steps to Recycle Your Styrofoam:

1. Identify your Styrofoam
   - Look for the #6 Recycling Symbol of EPS inside the symbol.
   - If you are unsure, bend the material. It should break, and you will notice individual beads of Styrofoam.
2. Make sure Styrofoam is clean, dry and free of all tapes and labels. If not, please discard.
3. Place Styrofoam Recycling in clear bags.
   - Black or opaque bags cannot be accepted.
   - All colors of packing peanuts may be mixed, but all peanuts must be bagged separately (in clear bag) from Styrofoam pieces.

Yes/Accepted

Clean Styrofoam | Clean Styrofoam Sheets | Clean Styrofoam Shipping Coolers | Clean Takeout Containers | Packing Peanuts In Separate Bag

Donations Gladly Accepted to Support: Master Gardener & Master Recycler Composter Programs

Anyone with questions may call 740-1451, 740-1212 or 1-800-749-5980.

This special recycling event is offered to you by the Lewis County Department of Public Works Solid Waste Utility, the WSU Lewis County Master Gardener volunteers and the WSU Lewis County Master Recycler Composter volunteers.

WASHINGTON STATE UNIVERSITY LEWIS COUNTY EXTENSION
Master Gardener Program

REDUCE REUSE RECYCLE

HomeTownDebate.com

ACE The helpful place. Napavine
John Sweeny
FREE
$6.66 PER BAG
• Sharpening • Keys • ACE Paints
Sweeny's Ace Hardware
114 A Alder Avenue NW, Napavine, WA 98565
(360) 262-1112 sweenysace@live.com
Mon - Fri. 8:30am - 5:30pm; Sat. 8:30am - 5:00pm; Sun. 10:00am - 3:00pm

The FAMILY HEALTH CLINIC of Chiropractic
NEW! FIRST TIME VISITS $20.00 Includes Consultation, Exam, Xrays
Dr. Michael Foster, DC
360-262-9477
napavinechiropractor.com
101 E. Washington
Napavine, WA 98565
foster_m_d@yahoo.com

Sharon Care Center
We Now Have Openings in Our Memory Care Facility!!
• Need Help With a Loved One
• Wandering
• Forgetful
• Help With Daily Tasks
You Can Count On Us!
Call Us Today For More Information
Join Us For A Tour And Lunch
1509 Harrison Ave., Centralia, WA 98531
(360) 736-0117 • email info@sharoncare.com

ALWAYS AVALIABLE ANYWHERE TOWING & AUTO REPAIR
360-274-6464
AUTO REPAIR
24 HR TOWING & LOCKOUTS
ROADSIDE ASSISTANCE
646 Spirit Lake Highway
Castle Rock, WA 98611

A COLOR VERSION IS AVAILABLE AT www.lewiscountywa.gov.

VADER-ENCHANTED VALLEY WATER SYSTEM NEWSLETTER

Lewis County Public Works, 2023 NE Kresky Ave, Chehalis, WA 98532
Lewis County Fiscal Billing Office, Lewis County Courthouse, 351 NW North St, Chehalis, WA 98532
Office Hours: 8:30 AM - 4 PM, Monday - Friday
Web address: www.lewiscountywa.gov/publicworks/utility-services or call 1-855-858-2843

Flint Water Crisis...Can it Happen Here?

The water crisis in Flint, Michigan, highlighted several issues. One, the disastrous combination of poor management and bad decisions lead to the poisoning of the water supply (excuse the pun). Two, the regulatory measures taken to ensure this vital human need of safe potable water were missing. And three, safe and sufficient water is viewed by many of the American public as a human right.

The Flint crisis is one that drinking water regulators, administrators and operators work to avoid. Can it happen here? Lewis County and the State Department of Health are working diligently to ensure nothing like this ever happens in Vader.

Our State Department of Health (DOH) regulates our public water systems under state statutory authority to protect the health of consumers using public drinking water supplies. DOH takes this mission seriously. For example, DOH drafted a fact sheet about lead exposure in response to the Flint crisis, which is attached with this newsletter for your use.

Lewis County also share DOH's mission of protecting your health. We work to be in compliance with federal and state regulations, and manage the water system efficiently and responsibly as possible. We test for lead and copper every three years. The last test was conducted in September 2013. We use new lead-free water service meters and fittings.

Other local conditions that work in our favor are the quality of our raw water source, the lack of multiple upstream outfalls, somewhat newer water pipes and the close coordination of our work with DOH and Lewis County Health.

The crisis is terrible for the residents of Flint but it started a national conversation about the importance of ensuring that drinking water regulations are followed; listening to the users of the water system and being responsive to complaints; ensuring adequate training and accountability for staff, and being open and accountable not only to the users of the water system but to regulators as well

Erik D. Olson, head of the health and environment program at the National Resources Defense Council summarized it well: "You think our roads and bridges aren't being fixed? The stuff underground is just totally ignored. We're mostly living off the investment of our parents and grandparents for our drinking water supply."

We hope to allay your fears of whether a Flint crisis can happen here by giving you information. A short article on Flint's problems is on page 2 of this newsletter.

Lewis County takes serious our responsibility to provide safe and reliable drinking water to our customers, and it is our honor to be the stewards of your water system.

Update on the New Reservoir

Our $717,000 Community Development Block Grant (CDBG) from the State Department of Commerce contract was approved in December 2015. The funding is for a new reservoir.
We now are in the process of selecting an engineering consultant for design engineering and construction management support services. We hope to start design this summer and start construction next spring in 2017.

CODE RED HAS BEEN REPLACED BY LEWIS COUNTY ALERT! SEE ARTICLE ON NEXT PAGE AND DON'T FORGET TO SIGN UP!

QUARTERLY SCHEDULE SYSTEM FLUSHING: *January-April-August-December*

Quarterly flushes will be performed between the 1st and 10th of scheduled months.

SUMMER ACTIVITY:

Valve Exercise and Isolation
Valve Marking
Vegetation Maintenance around facility

The Flint Michigan Water Crisis

As manufacturing jobs moved away from Flint and families escaped into the suburbs, Flint's tax base hollowed out. The Governor declared a state of financial emergency for Flint in 2011, when it faced $15 million in debt. The state took budgetary control and the governor appointed an emergency manager to run the city. All decisions made about the water crisis were at the state level.

Switching water sources from Lake Huron to Flint River was intended to save money for the struggling industrial town of Flint, Michigan. The switch was supposed to be temporary until a new state-run supply line to Lake Huron was ready for connection. The switch was made in April 2014. The water started to look, smell and taste funny shortly after the switch. The contaminant was iron. The Flint River is highly corrosive, about 19 times more so than the Lake Huron supply. Yet the state Department of Environmental Quality was not treating the Flint River water with a corrosion inhibitor which was a violation of federal law. The water was eroding the iron water mains and turning the water brown.

About half of the service lines to homes in Flint are made of lead. Because the river water was not properly treated and highly corrosive, it leached lead into homes.

The City switched back to Detroit water in October 2015. Researchers still detect lead levels—lower levels—in water in Flint homes. The state is handing out filters and bottled water.

Lead poisoning is irreversible and the children who tested elevated levels will suffer lifelong consequences. It drops your IQ and affects behavior with multigenerational impacts. There are some environmental actions that can help mitigate exposure such as proper nutrition and early childhood education. That was difficult in Flint with inadequate resources.

CODE RED HAS BEEN REPLACED BY LEWIS COUNTY ALERT

Recently, the old Code Red emergency alert system was replaced by Lewis County Alert.

If you received Code Red messages about water outages from us via cellphone, text, or email, you will need to sign up again with the Lewis County Alert system. If you currently have a landline phone, that number will be automatically called with the alert information.

In addition to the Vader/Enchanted Valley Water alerts you will also be notified of any emergency information that would impact you such as fires or other potential disasters. It is our goal to notify you as quickly as possible. Signing up for Lewis County Alert will help ensure that occurs.

Please refer to the website below for more information.

http://lewiscountywa.gov/911/codered-changes-to-lewis-county-alert

A COLOR VERSION IS AVAILABLE AT www.lewiscountywa.gov.

VADER-ENCHANTED VALLEY WATER SYSTEM NEWSLETTER

Lewis County Public Works, 2025 NE Kresky Ave, Chehalis, WA 98532
Lewis County Fiscal Billing Office, Lewis County Courthouse, 351 NW North St, Chehalis, WA 98532
Office Hours: 8:30 AM - 4 PM, Monday - Friday
Web address: www.lewiscountywa.gov/publicworks/utility-services or call 1-855-858-2843

Is That Normal?

We are available Monday through Friday from 8:00 AM to 4:00 PM at 1-855-858-2843 to answer questions, resolve problems, receive comments (and kudos) and report leaks. After we understand your need, we can issue a work order to investigate or take measures to correct the situation. Our response time will depend upon the nature of the problem, but we will follow up with customers as needed. Comments and kudos are also welcome.

We are always looking for leaks and other unaccounted water usages. If you see a dip in the roadway, water flowing out of the ground, slumping ground, or isolated green patch of vegetation amidst dry vegetation, it may indicate a water main break. If you see something like this, please call and let us know.

FREE DRAWING

All customers who remit payment of the October 2015 invoice by November 5, 2015 are eligible for a drawing of an outdoor water saver kit.

Coming Soon to Your Neighborhood...a New Water Reservoir!

Good news everyone. We heard on August 27 that our grant application for a new water reservoir was approved! The funding is a $717,000 Community Development Block Grant (CDBG) from the State Department of Commerce.

The project is a new water reservoir at our water plant. Our existing 250,000-gallon water reservoir was built in 1979. Distribution system problems and deferred maintenance have made problems for our existing tank. A comprehensive inspection of the tank interior and exterior in 2013 showed a need for recoating. The main advantage of this project is that we will have a two-tank water system which gives us operational flexibility and additional capacity. Our existing tank will eventually have to be recoated but another tank will enable uninterrupted water service.

We will start as soon as the grant contract is approved. We hope to get started on the preliminary design this winter.

DROUGHT AND WINTER WISHES

With the shorter days and cooler weather of autumn, the summer drought and heat may recede in our memories of just another "hot summer". However, drought conditions can still linger especially in the Pacific Northwest where many public water systems rely on a heavy snowpack for their water supply. Our water supply is from the Cowlitz River which is fed from snowmelt from the east side of Mt Rainier and surrounding mountains.

Heavy winter rains are not enough to build up a heavy snowpack. We need snow in the mountains with cool temperatures in the spring. The cooler temperatures in the spring will control and regulate the release of meltwaters throughout the summer. A heavy snowpack is our reservoir and we need lots of it.

Although it is still water, the density of snow is different from precipitation. This is further complicated by the type of snow: wet or dry. Dry snow is very light, has very little liquid content and lots of air pockets in the snowflake. Dry snow is not "sticky" making it difficult to make snowballs and is easily blown about by the wind. The ideal snow is wet snow falling at freezing or below ground temperatures. The "average" snow to liquid ratio is 10:1. This is saying if 10 inches of wet snow was melted, it would make about 1 inch of rain.

It is still too early to tell if we should anticipate another drought, but we encourage you to practice water conservation. I know. A water utility telling their customers to practice water conservation seems counterproductive, because water sales pay for water utility operations. However, it is our goal to improve production and operational efficiencies to provide safe potable water. Although less water usage means decreased water sales, it also results in lower production costs.

It benefits us all to practice water conservation.

What do I want this year? Whirled peas. Oops make that world peace and a heavy snowpack!

by Lady Clearwater

WATER USE EFFICIENCY GOAL

The water system plan (WSP) has been prepared and will be submitted to Department of Health (DOH) for review this year. The WSP is a planning document that is required to be updated every six years or more frequently to reflect current conditions of the water system. The previous one was prepared for the City of Vader and dated May 2008.

Another reason besides regulatory compliance is because we have been managing your water system since October 30, 2010 and ownership was transferred to Lewis County as of April 30, 2014. We have operational goals and organizational structures that are different than the City. This information has to be outlined in the WSP. Our WSP will also outline our management, cross-connection control, water conservation, capital improvement and water use efficiency programs.

One requirement of our water use efficiency program is to establish a water use efficiency goal. The water system had a water loss exceeding 50% when we started management of the system in October 2010. The loss rate was reduced to 19% for 2014 with a three-year average (2012-2014) of 37%. We are asked to report annual and three-year average water loss values to DOH every year.

We would like to continue lowering our water losses and have set a water use efficiency goal to: ***"reduce distribution system leakage to less than 20% of total production by 2034 as calculated on a rolling three-year average".*** This also translates to an annual water loss rate of 10% or less.

We would like to hear from you, our customer, about what you think of the proposed water use efficiency goal. Please email or call us at our toll-free utility number.

We will be holding a public hearing about your WSP which is another opportunity to let us know about the proposed goal. The public hearing date is tentatively set for this year and details will be announced in the Lewis County WebSite.

New Look, Same Service

Starting this month, your water bill will have a new look. When we started managing the system in October 2010, we inherited the billing software system that was used by the City of Vader. Technical updates and support services by the vendor were discontinued in 2012 so we changed to a new billing system. It was our hope to have it in use last August, but the creation, transfer of data, training and testing took longer than expected.

The change to the new billing software will also simplify our billing process. We can use standard sized paper and envelopes thus forgoing the cost of special stationery. We also can run reports readily without using intermediate steps such as exporting data into a spreadsheet.

If you need help to understand your new utility bill, we are here at 1-855-858-2843.

LEWIS COUNTY

Vader-Enchanted Valley Water System
Historic Courthouse, RM 030
351 NW North Street
Chehalis, WA 98532

VADER-ENCHANTED VALLEY WATER BILL

APPENDIX C

Water Rights Certificates

S.W.C. # 9616

CERTIFICATE OF CHANGE OF POINT OF DIVERSION OF WATER

In accordance with the provisions of Chapter 117, Laws of Washington for 1917, and amendments thereto and rules thereunder of the State Director of Ecology.

THIS IS TO CERTIFY That the Town of Vader, Washington, has complied with all of the requirements of the Revised Code of Washington 90.03.380 and is hereby granted the right to change the point of diversion of the waters of Cowlitz River in the amount of 0.50 cubic feet per second as granted under Surface Water Certificate No. 9616.

That the use of such water is for municipal supply and that said 0.50 cubic feet per second of water had been diverted from the Cowlitz River at a point described in said certificate as being within Government Lots 2 and 3 of Section 28, Township 11 North, Range 2 West W.M.

That it has changed the point of diversion to a point situated in Government Lot 2 of Section 28, Township 11 North, Range 2 West W.M., Lewis County, Washington, such point being approximately 240 feet above the present point of diversion.

Given under my hand and seal of this office at Olympia, Washington, this 21st day of November, 1972.

R. Jerry Bollen

R. JERRY BOLLEN, Assistant Director
Office of Operations

RECORDED:

Volume I-2, pp 7
Certificates of Change

U. S. P. No. 349—1-37—551. 47878. O.S.

CERTIFICATE RECORD No. 20, PAGE No. 9616

STATE OF WASHINGTON, COUNTY OF Lewis

CERTIFICATE OF SURFACE WATER RIGHT

(In accordance with the provisions of Chapter 117, Laws of Washington for 1917, and amendments thereto, and the rules and regulations of the State Supervisor of Water Resources thereunder.)

This is to certify that TOWN OF VADER

of Vader, State of Washington, has made proof to the satisfaction of the State Supervisor of Water Resources of Washington, of right to the use of the waters of Cowlitz River, a tributary of Columbia River with point or points of diversion within the Gov't Lots 2 and 3 Sec. 20, Twp. 11 N., R. 2 W., W. M., under and subject to provisions contained in Appropriation Permit No. 12590 issued by the State Supervisor of Water Resources, and that said right to the use of said waters has been perfected in accordance with the laws of Washington and is hereby confirmed by the State Supervisor of Water Resources of Washington and entered of record in Volume 20, at Page 9616, on the 26th day of April, 19[illegible], that the priority date of the right hereby confirmed is November 9, 19[illegible], that the amount of water under the right hereby confirmed, for the following purposes is limited to an amount actually beneficially used and shall not exceed 0.50 cubic feet per second for municipal supply.

A description of the lands under such right to which the water right is appurtenant, and the place where such water is put to beneficial use, is as follows:

Town of Vader

The right to the use of the water aforesaid hereby confirmed is restricted to the lands or place of use herein described, except as provided in Sections 6 and 7, Chapter 122, Laws of 1929.

WITNESS the seal and signature of the State Supervisor of Water Resources affixed this 27th day of April, 1966.

M. G. Walker
State Supervisor of Water Resources.

Form No. 1364—7-57—5M. 6073T. O.S.

Proof of Appropriation of Water

Application No. 17004 Permit No. 12590

1. Name of Permittee TOWN OF VADER
2. Postoffice address Vader, Washington
3. Source of appropriation Cowlitz River
4. Name or number of works (if any)
5. For what purpose or purposes is water used? Municipal Supply
6. Give date of beginning of construction December 12, 1963
7. Give date of completion of construction work, including water distribution system July 19, 1965
8. Give date when water was completely applied to proposed use July 19, 1965
9. If used for irrigation: No

   Give number of acres described in permit None

   Give number of acres actually irrigated None
10. If used for power: HP actually developed None
11. LEGAL DESCRIPTION OF PROPERTY ON WHICH WATER IS USED:

    Secs. 29, 32, 33 Township 11N Rge. 2 W.W.M.

12. During what months is water used? All (Most used in Summer)
13. Does map filed with your application show correctly the location of well or point of diversion for withdrawal of water, and area of land where water is used? Yes
14. If the dimensions, location or type of structure do not correspond to those described in your permit, state what changes have been made, giving dimensions, etc. None
15. Actual measured discharge or diversion of permanent system: 0.50 (gpm or cfs)

(Sign certification on reverse side)

STATE PRINTING PLANT OLYMPIA, WASHINGTON

STATE OF WASHINGTON,
County of LEWIS } ss.

I, GEORGE F.L. BRUNK, being first duly sworn, depose and say that I have read the above and foregoing proof of appropriation; that I know the contents thereof, and that the facts therein stated are true.

IN WITNESS WHEREOF, I have hereunto set my hand this 13TH day of APRIL, 19[illegible]

George F.L. Brunk

Subscribed and sworn to before me this 13TH day of April, 19[illegible]

[illegible]
Notary Public

STATE OF WASHINGTON
DEPARTMENT OF CONSERVATION
Division of Water Resources

Permit to Appropriate Public Waters of the State of Washington

Book No. 33 of Permits, on Page 12590 Under Application No. 17004

TOWN OF VADER

of Vader, Washington

is hereby granted a permit to appropriate the following described public waters of the State of Washington, subject to existing rights and to the following limitations and provisions: Permittee shall construct and maintain at his own expense a weir, or other suitable device, for measuring any water granted herein for irrigation purposes and such appropriation shall be subject to a reasonable rotation system if ordered by the State Supervisor of Water Resources. Diversion intake shall be tightly screened at all times with wire having a mesh opening not greater than 0.125 (1/8) inch. No dam shall be constructed in connection with this diversion.

Priority date of this permit is November 9, 1961

Source of the proposed appropriation is Cowlitz River

tributary of Columbia River

The quantity of water appropriated shall be limited to the amount which can be beneficially applied and not to exceed 0.50 cubic feet per second, or its equivalent in case of rotation, to be used for the following purposes. Municipal supply

as more definitely set out below.

The approximate point of diversion is located 400 feet west of southeast corner of the [illegible]

being within Govt. Lots 2 & 3 Sec. 28 Twp. 11 N., Rge. 2 W. W. M.,

county of Lewis

The use, or uses, to which water is to be applied:

FOR DOMESTIC SUPPLY AND MISCELLANEOUS USES: cubic feet per second during entire year for to be used within Sec. Twp. N., Rge. W. M.,

FOR IRRIGATION: cubic feet per second, acre-feet per year, from to each year, for irrigation of acres described as follows:

FOR POWER: cubic feet per second continuously each year. Total power to be developed . . . . . theoretical horse power. Total fall to be utilized . . . . . feet.

Nature of works by means of which power is to be developed . . .

Works to be located in . . Sec. . . . . Twp. . . . . N., Rge. . . . . W. M.

Water to be returned to . . .

Point of return . . . . . Sec. . . . . Twp. . . . . N., Rge. . . . . W. M.

Use to which power is to be applied . . .

FOR MUNICIPAL SUPPLY: 0.50 cubic feet per second during entire year to supply . . .

Town of Vader, Lewis County, Washington

DESCRIPTION OF DIVERSION WORK

Height of dam . . . . . ft.; Length on top . . . . . ft.; Length on bottom . . . . . ft.

Material to be used and character of construction . . .

Description of headgate. Concrete intake structure located on river bank, pipeline from intake to service area. Small treatment plant (probably disinfection by hypochlorites).

CANAL SYSTEM

AT HEADGATE: Width on top (at water line) . . . . . ft.; Width on bottom . . . . . ft.;

Depth of water . . . . . ft.; Grade . . . . . ft. fall per one thousand feet.

AT . . . . . MILES FROM HEADGATE: Width on top (at water line) . . . . . ft.; Width on bottom . . . . . ft.; Depth of water . . . . . ft.; Grade . . . . . feet per one thousand feet.

(Please read carefully provisions below)

Construction work shall begin on or before Started

and shall thereafter be prosecuted with reasonable diligence and completed on or before

March 1, 1963

and complete application of water to proposed uses shall be made on or before

March 1, 1964

Given under my hand and the seal of this office at Olympia, Washington, this 23rd day of February, 1962

M. G. Walker

State Supervisor of Water Resources

REPORT OF EXAMINATION

Date of application 11-9-61 Date of examination 12-11-61 Application No. 17004

Name Town of Vader Address George F. L. Brunk, Clerk Vader, Wash.

Quantity applied for 0.50 c.f.s. Use municipal supply

Source of appropriation Cowlitz River Tributary of Columbia River

Legal sub. Govt Lots 2 & 3 Sec. 28 Twp. 11 N. Rge. 2 W. County Lewis

Measured or estimated quantity see records Probable low flow same

Quantity previously appropriated: W.T. CWT. E.T.

Other use made of water irrigation, stock water, industrial uses, and domestic supply

Diversion works contemplated ~~or observed~~ concrete intake structure located on river bank, pipeline from intake to service area.

Other equipment small treatment plant (probably disinfection by hypochlorites)

Irrigable acreage: Planned Present Feasible

Other water rights appurtenant to this land none recorded

Progress of project started

Protests

Quantity recommended (total) 0.50 c.f.s. Irrig. Dom.

Power Municipal 0.50 c.f.s. Other uses

Department of Fisheries and Game report see below

Special remarks and provisions: Diversion intake shall be tightly screened at all times with wire having a mesh opening not greater than 0.125 (1/8) inch.

No dam shall be constructed in connection with this diversion.

In accordance with section 90.20.060 RCW, I find that there is water available for appropriation from the source in question and that the diversion proposed in the application will not impair existing rights or be detrimental to the public welfare. Therefore, permit should issue as recommended above, subject to existing rights and indicated provisions.

Signed this 19th day of January, 1962.
Division of Water Resources

William R. Smith
WILLIAM R. SMITH, Geologist

APPENDIX D

Hydraulic Analyses

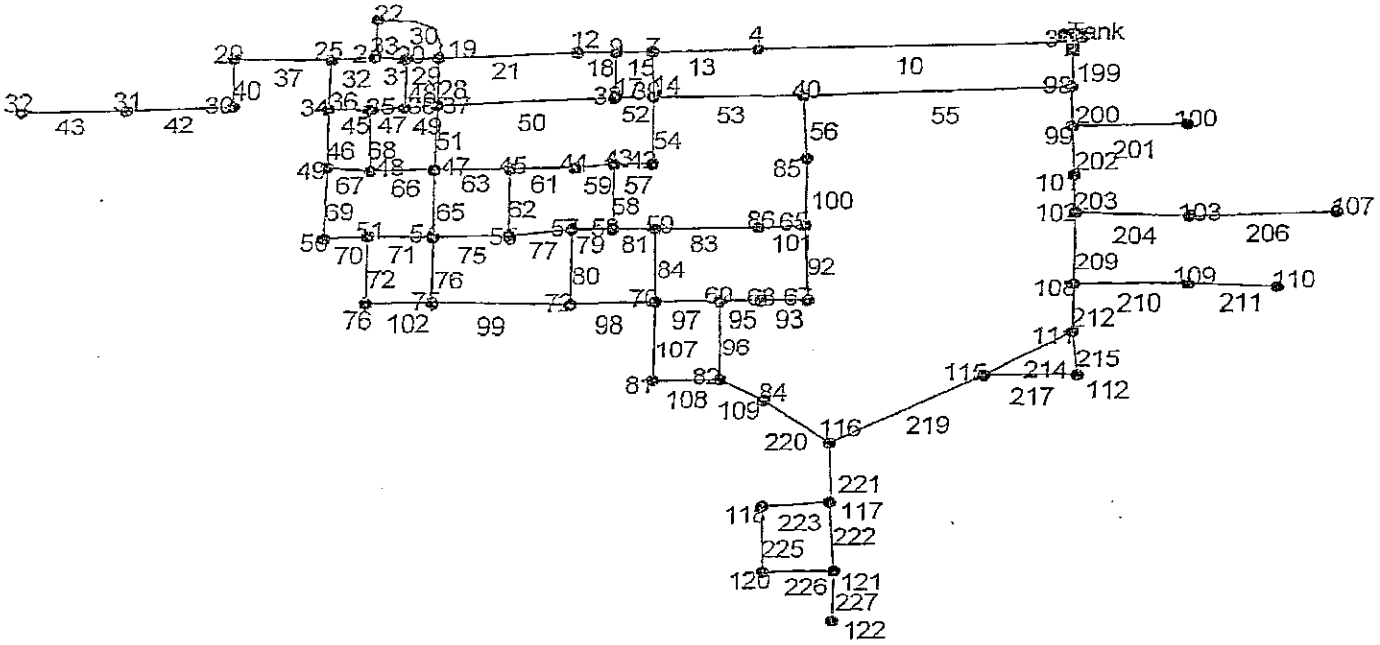
Tank

SCENARIO 1

"Calibration, 150, 2014 ADD."net
Demand = 54,232 gpd
Multiplier 359 units
= 0.10

Network Table - Nodes

Node ID	Demand GPM	Head ft	Pressure psi	Quality
Junc 98	0.00	328.00	19.06	0.00
Junc 40	0.20	327.99	32.06	0.00
Junc 39	0.50	327.99	61.52	0.00
Junc 7	0.40	327.99	63.26	0.00
Junc 4	0.40	327.99	57.19	0.00
Junc 9	1.10	327.99	64.99	0.00
Junc 12	0.60	327.99	68.02	0.00
Junc 19	1.30	327.99	69.32	0.00
Junc 22	0.80	327.99	71.06	0.00
Junc 24	0.40	327.99	70.62	0.00
Junc 20	0.00	327.99	70.19	0.00
Junc 25	0.20	327.99	72.36	0.00
Junc 29	0.00	327.99	80.59	0.00
Junc 30	0.60	327.99	79.72	0.00
Junc 31	0.00	327.99	81.45	0.00
Junc 32	0.90	327.99	81.45	0.00
Junc 34	0.60	327.99	71.06	0.00

Node ID	Demand GPM	Head ft	Pressure psi	Quality
Junc 35	0.00	327.99	70.19	0.00
Junc 48	0.20	327.99	70.19	0.00
Junc 49	0.80	327.99	70.62	0.00
Junc 36	0.70	327.99	69.76	0.00
Junc 37	0.60	327.99	69.32	0.00
Junc 38	0.00	327.99	61.52	0.00
Junc 47	0.50	327.99	70.19	0.00
Junc 45	0.80	327.99	64.99	0.00
Junc 44	0.00	327.99	56.32	0.00
Junc 43	0.90	327.99	54.59	0.00
Junc 42	0.00	327.99	54.59	0.00
Junc 58	0.00	327.99	51.12	0.00
Junc 59	1.50	327.99	49.82	0.00
Junc 65	0.10	327.99	45.92	0.00
Junc 57	0.80	327.99	54.59	0.00
Junc 55	0.20	327.99	64.99	0.00
Junc 54	0.90	327.99	69.76	0.00
Junc 51	0.60	327.99	72.36	0.00

Node ID	Demand GPM	Head ft	Pressure psi	Quality
Junc 50	1.30	327.99	73.66	0.00
Junc 76	0.80	327.99	77.99	0.00
Junc 75	1.20	327.99	71.49	0.00
Junc 72	0.80	327.99	64.99	0.00
Junc 70	0.30	327.99	55.46	0.00
Junc 69	0.30	327.99	48.52	0.00
Junc 68	1.30	327.99	47.66	0.00
Junc 67	0.60	327.99	51.12	0.00
Junc 81	0.90	327.99	64.12	0.00
Junc 82	0.80	327.99	59.79	0.00
Junc 102	0.00	327.98	43.76	0.00
Junc 99	0.20	327.99	40.73	0.00
Junc 100	0.40	327.99	59.79	0.00
Junc 103	0.70	327.98	59.35	0.00
Junc 108	1.00	327.98	45.06	0.00
Junc 107	0.60	327.98	98.78	0.00
Junc 109	0.60	327.98	46.36	0.00
Junc 110	1.00	327.97	45.05	0.00

Node ID	Demand GPM	Head ft	Pressure psi	Quality
Junc 111	1.40	327.98	47.22	0.00
Junc 112	0.50	327.98	46.79	0.00
Junc 115	1.90	327.98	55.45	0.00
Junc 116	0.00	327.98	71.05	0.00
Junc 84	0.30	327.99	64.12	0.00
Junc 117	0.10	327.98	77.12	0.00
Junc 118	0.50	327.98	95.32	0.00
Junc 120	0.00	327.98	98.35	0.00
Junc 121	0.00	327.98	96.19	0.00
Junc 122	0.50	327.98	98.79	0.00
Junc 101	0.40	327.98	43.76	0.00
Junc 85	0.20	327.99	41.59	0.00
Junc 86	0.60	327.99	48.52	0.00
Tank 3	-35.80	328.00	5.63	0.00

SCENARIO 2a
2035 PHD (231gpm)
DEMAND MULTIPLIER 0.65

Network Table - Nodes

Node ID	Elevation ft	Demand GPM	Head ft	Pressure psi	Quality
Junc 98	284	0.00	327.89	19.02	0.00
Junc 40	254	1.30	327.61	31.90	0.00
Junc 39	186	3.25	327.61	61.36	0.00
Junc 7	182	2.60	327.64	63.10	0.00
Junc 4	196	2.60	327.73	57.08	0.00
Junc 9	178	7.15	327.62	64.83	0.00
Junc 12	171	3.90	327.61	67.86	0.00
Junc 19	168	8.45	327.59	69.15	0.00
Junc 22	164	5.20	327.59	70.88	0.00
Junc 24	165	2.60	327.59	70.45	0.00
Junc 20	166	0.00	327.59	70.02	0.00
Junc 25	161	1.30	327.59	72.18	0.00
Junc 29	142	0.00	327.59	80.41	0.00
Junc 30	144	3.90	327.58	79.55	0.00
Junc 31	140	0.00	327.58	81.28	0.00
Junc 32	140	5.85	327.58	81.28	0.00
Junc 34	164	3.90	327.58	70.88	0.00
Junc 35	166	0.00	327.58	70.01	0.00
Junc 48	166	1.30	327.58	70.01	0.00
Junc 49	165	5.20	327.58	70.44	0.00
Junc 36	167	4.55	327.59	69.58	0.00

Node ID	Elevation ft	Demand GPM	Head ft	Pressure psi	Quality
Junc 37	168	3.90	327.59	69.15	0.00
Junc 38	186	0.00	327.62	61.36	0.00
Junc 47	166	3.25	327.58	70.01	0.00
Junc 45	178	5.20	327.58	64.81	0.00
Junc 44	198	0.00	327.58	56.15	0.00
Junc 43	202	5.85	327.58	54.41	0.00
Junc 42	202	0.00	327.59	54.42	0.00
Junc 58	210	0.00	327.57	50.94	0.00
Junc 59	213	9.75	327.57	49.64	0.00
Junc 65	222	0.65	327.57	45.75	0.00
Junc 57	202	5.20	327.57	54.41	0.00
Junc 55	178	1.30	327.57	64.81	0.00
Junc 54	167	5.85	327.57	69.58	0.00
Junc 51	161	3.90	327.57	72.18	0.00
Junc 50	158	8.45	327.57	73.48	0.00
Junc 76	148	5.20	327.57	77.81	0.00
Junc 75	163	7.80	327.57	71.31	0.00
Junc 72	178	5.20	327.57	64.81	0.00
Junc 70	200	1.95	327.57	55.27	0.00
Junc 69	216	1.95	327.56	48.34	0.00
Junc 68	218	8.45	327.56	47.47	0.00
Junc 67	210	3.90	327.57	50.94	0.00

Node ID	Elevation ft	Demand GPM	Head ft	Pressure psi	Quality
Junc 81	180	5.85	327.55	63.93	0.00
Junc 82	190	5.20	327.55	59.60	0.00
Junc 102	227	0.00	327.47	43.53	0.00
Junc 99	234	1.30	327.83	40.66	0.00
Junc 100	190	2.60	327.82	59.72	0.00
Junc 103	191	4.55	327.46	59.13	0.00
Junc 108	224	6.50	327.43	44.82	0.00
Junc 107	100	3.90	327.43	98.55	0.00
Junc 109	221	3.90	327.43	46.12	0.00
Junc 110	224	6.50	326.89	44.58	0.00
Junc 111	219	9.10	327.43	46.98	0.00
Junc 112	220	3.25	327.44	46.55	0.00
Junc 115	200	12.35	327.45	55.23	0.00
Junc 116	164	0.00	327.48	70.84	0.00
Junc 84	180	1.95	327.54	63.93	0.00
Junc 117	150	0.65	327.48	76.90	0.00
Junc 118	108	3.25	327.48	95.10	0.00
Junc 120	101	0.00	327.48	98.13	0.00
Junc 121	106	0.00	327.48	95.97	0.00
Junc 122	100	3.25	327.48	98.57	0.00
Junc 101	227	2.60	327.48	43.54	0.00
Junc 85	232	1.30	327.59	41.42	0.00

Node ID	Elevation ft	Demand GPM	Head ft	Pressure psi	Quality
Junc 86	216	3.90	327.57	48.35	0.00
Tank 3	315	-232.70	328.00	5.63	0.00

SCENARIO 2P
2035 PHD (231 gpm)
DEMAND MULTIPLIER 0.65

Network Table - Links

Link ID	Flow GPM	Velocity fps	Unit Headloss ft/Kft	Friction Factor	Reaction Rate mg/L/d	Quality	Status
Pipe 10	158.64	0.65	0.16	0.020	0.00	0.00	Open
Pipe 13	156.04	0.64	0.15	0.020	0.00	0.00	Open
Pipe 15	108.98	0.45	0.08	0.021	0.00	0.00	Open
Pipe 17	23.64	0.15	0.01	0.026	0.00	0.00	Open
Pipe 18	78.19	0.32	0.04	0.022	0.00	0.00	Open
Pipe 21	74.29	0.30	0.04	0.022	0.00	0.00	Open
Pipe 199	74.06	0.84	0.46	0.021	0.00	0.00	Open
Pipe 55	46.13	0.52	0.22	0.025	0.00	0.00	Open
Pipe 53	0.48	0.01	0.00	0.053	0.00	0.00	Open
Pipe 52	-7.04	0.08	0.01	0.034	0.00	0.00	Open
Pipe 30	-9.97	0.06	0.00	0.029	0.00	0.00	Open
Pipe 29	36.33	0.15	0.01	0.025	0.00	0.00	Open
Pipe 31	22.51	0.09	0.00	0.027	0.00	0.00	Open
Pipe 32	24.68	0.10	0.01	0.027	0.00	0.00	Open
Pipe 37	9.75	0.04	0.00	0.029	0.00	0.00	Open
Pipe 40	9.75	0.11	0.01	0.028	0.00	0.00	Open
Pipe 42	5.85	0.07	0.00	0.030	0.00	0.00	Open
Pipe 43	5.85	0.07	0.00	0.031	0.00	0.00	Open
Pipe 36	13.63	0.15	0.02	0.031	0.00	0.00	Open
Pipe 45	-1.59	0.02	0.00	0.045	0.00	0.00	Open
Pipe 25	-8.50	0.10	0.01	0.033	0.00	0.00	Open

Link ID	Flow GPM	Velocity fps	Unit Headloss ft/Kft	Friction Factor	Reaction Rate mg/L/d	Quality	Status
Pipe 49	0.77	0.01	0.00	0.000	0.00	0.00	Open
Pipe 70	9.83	0.06	0.00	0.029	0.00	0.00	Open
Pipe 67	12.16	0.08	0.00	0.028	0.00	0.00	Open
Pipe 68	-6.91	0.04	0.00	0.036	0.00	0.00	Open
Pipe 66	-6.55	0.04	0.00	0.032	0.00	0.00	Open
Pipe 63	0.63	0.00	0.00	0.000	0.00	0.00	Open
Pipe 61	-14.33	0.09	0.01	0.028	0.00	0.00	Open
Pipe 59	-14.33	0.09	0.01	0.027	0.00	0.00	Open
Pipe 57	-48.73	0.31	0.05	0.023	0.00	0.00	Open
Pipe 81	18.02	0.12	0.01	0.027	0.00	0.00	Open
Pipe 83	-14.56	0.09	0.01	0.028	0.00	0.00	Open
Pipe 95	11.59	0.13	0.01	0.027	0.00	0.00	Open
Pipe 96	22.70	0.14	0.01	0.026	0.00	0.00	Open
Pipe 107	-26.07	0.17	0.02	0.025	0.00	0.00	Open
Pipe 97	13.06	0.15	0.02	0.027	0.00	0.00	Open
Pipe 98	-18.25	0.12	0.01	0.027	0.00	0.00	Open
Pipe 79	-10.53	0.12	0.01	0.032	0.00	0.00	Open
Pipe 72	11.13	0.07	0.00	0.029	0.00	0.00	Open
Pipe 102	5.93	0.04	0.00	0.030	0.00	0.00	Open
Pipe 99	11.18	0.07	0.00	0.029	0.00	0.00	Open
Pipe 71	-5.20	0.03	0.00	0.031	0.00	0.00	Open
Pipe 75	-1.51	0.02	0.00	0.041	0.00	0.00	Open

Link ID	Flow GPM	Velocity fps	Unit Headloss ft/Kft	Friction Factor	Reaction Rate mg/L/d	Quality	Status
Pipe 77	6.94	0.08	0.01	0.033	0.00	0.00	Open
Pipe 65	22.58	0.14	0.01	0.026	0.00	0.00	Open
Pipe 76	13.05	0.08	0.00	0.028	0.00	0.00	Open
Pipe 62	9.76	0.11	0.01	0.032	0.00	0.00	Open
Pipe 84	22.83	0.15	0.01	0.026	0.00	0.00	Open
Pipe 50	-16.60	0.19	0.03	0.030	0.00	0.00	Open
Pipe 56	44.35	0.28	0.04	0.023	0.00	0.00	Open
Pipe 93	-20.04	0.13	0.01	0.026	0.00	0.00	Open
Pipe 92	23.94	0.15	0.01	0.026	0.00	0.00	Open
Pipe 80	12.27	0.08	0.00	0.029	0.00	0.00	Open
Pipe 58	28.55	0.18	0.02	0.025	0.00	0.00	Open
Pipe 69	18.28	0.12	0.01	0.027	0.00	0.00	Open
Pipe 46	11.32	0.07	0.00	0.029	0.00	0.00	Open
Pipe 51	33.02	0.21	0.03	0.024	0.00	0.00	Open
Pipe 54	48.73	0.31	0.06	0.026	0.00	0.00	Open
Pipe 48	13.82	0.09	0.01	0.028	0.00	0.00	Open
Pipe 33	4.77	0.03	0.00	0.031	0.00	0.00	Open
Pipe 14	44.46	0.28	0.04	0.023	0.00	0.00	Open
Pipe 28	19.54	0.12	0.01	0.026	0.00	0.00	Open
Pipe 108	20.22	0.13	0.01	0.026	0.00	0.00	Open
Pipe 200	27.93	0.32	0.08	0.024	0.00	0.00	Open
Pipe 201	2.60	0.07	0.01	0.033	0.00	0.00	Open

Link ID	Flow GPM	Velocity fps	Unit Headloss ft/Kft	Friction Factor	Reaction Rate mg/L/d	Quality	Status
Pipe 204	8.45	0.10	0.01	0.029	0.00	0.00	Open
Pipe 206	3.90	0.10	0.01	0.031	0.00	0.00	Open
Pipe 209	12.98	0.15	0.02	0.027	0.00	0.00	Open
Pipe 212	-3.92	0.04	0.00	0.032	0.00	0.00	Open
Pipe 217	-15.50	0.18	0.03	0.026	0.00	0.00	Open
Pipe 210	10.40	0.12	0.01	0.028	0.00	0.00	Open
Pipe 211	6.50	0.66	1.07	0.026	0.00	0.00	Open
Pipe 214	-0.77	0.08	0.02	0.036	0.00	0.00	Open
Pipe 219	-28.62	0.32	0.08	0.024	0.00	0.00	Open
Pipe 220	-35.77	0.41	0.12	0.023	0.00	0.00	Open
Pipe 109	-37.72	0.24	0.03	0.024	0.00	0.00	Open
Pipe 221	7.15	0.08	0.01	0.030	0.00	0.00	Open
Pipe 222	0.29	0.03	0.00	0.041	0.00	0.00	Open
Pipe 227	3.25	0.04	0.00	0.033	0.00	0.00	Open
Pipe 223	6.21	0.07	0.00	0.030	0.00	0.00	Open
Pipe 225	2.96	0.03	0.00	0.033	0.00	0.00	Open
Pipe 226	2.96	0.03	0.00	0.035	0.00	0.00	Open
Pipe 202	24.03	0.61	0.41	0.023	0.00	0.00	Open
Pipe 203	21.43	0.24	0.05	0.025	0.00	0.00	Open
Pipe 215	-12.25	0.14	0.02	0.027	0.00	0.00	Open
Pipe 101	-18.46	0.05	0.00	0.029	0.00	0.00	Open
Pipe 100	43.05	0.27	0.04	0.024	0.00	0.00	Open

SCENARIO 3
DEMAND MULTIPLIER = 0.01

Network Table - Nodes

Node ID	Demand GPM	Head ft	Pressure psi	Quality
Junc 98	0.00	328.00	19.07	0.00
Junc 40	0.00	328.00	32.06	0.00
Junc 39	0.00	328.00	61.53	0.00
Junc 7	0.00	328.00	63.26	0.00
Junc 4	0.00	328.00	57.20	0.00
Junc 9	0.01	328.00	65.00	0.00
Junc 12	0.01	328.00	68.03	0.00
Junc 19	0.01	328.00	69.33	0.00
Junc 22	0.01	328.00	71.06	0.00
Junc 24	0.00	328.00	70.63	0.00
Junc 20	0.00	328.00	70.19	0.00
Junc 25	0.00	328.00	72.36	0.00
Junc 29	0.00	328.00	80.59	0.00
Junc 30	0.01	328.00	79.73	0.00
Junc 31	0.00	328.00	81.46	0.00
Junc 32	0.01	328.00	81.46	0.00
Junc 34	0.01	328.00	71.06	0.00
Junc 35	0.00	328.00	70.19	0.00
Junc 48	0.00	328.00	70.19	0.00
Junc 49	0.01	328.00	70.63	0.00
Junc 36	0.01	328.00	69.76	0.00

Node ID	Demand GPM	Head ft	Pressure psi	Quality
Junc 37	0.01	328.00	69.33	0.00
Junc 38	0.00	328.00	61.53	0.00
Junc 47	0.00	328.00	70.19	0.00
Junc 45	0.01	328.00	65.00	0.00
Junc 44	0.00	328.00	56.33	0.00
Junc 43	0.01	328.00	54.60	0.00
Junc 42	0.00	328.00	54.60	0.00
Junc 58	0.00	328.00	51.13	0.00
Junc 59	0.01	328.00	49.83	0.00
Junc 65	0.00	328.00	45.93	0.00
Junc 57	0.01	328.00	54.60	0.00
Junc 55	0.00	328.00	65.00	0.00
Junc 54	0.01	328.00	69.76	0.00
Junc 51	0.01	328.00	72.36	0.00
Junc 50	0.01	328.00	73.66	0.00
Junc 76	0.01	328.00	77.99	0.00
Junc 75	0.01	328.00	71.49	0.00
Junc 72	0.01	328.00	65.00	0.00
Junc 70	0.00	328.00	55.46	0.00
Junc 69	0.00	328.00	48.53	0.00
Junc 68	0.01	328.00	47.66	0.00
Junc 67	0.01	328.00	51.13	0.00

Node ID	Demand GPM	Head ft	Pressure psi	Quality
Junc 81	0.01	328.00	64.13	0.00
Junc 82	0.01	328.00	59.80	0.00
Junc 102	0.00	328.00	43.76	0.00
Junc 99	0.00	328.00	40.73	0.00
Junc 100	0.00	328.00	59.80	0.00
Junc 103	0.01	328.00	59.36	0.00
Junc 108	0.01	328.00	45.06	0.00
Junc 107	0.01	328.00	98.79	0.00
Junc 109	0.01	328.00	46.36	0.00
Junc 110	0.01	328.00	45.06	0.00
Junc 111	0.01	328.00	47.23	0.00
Junc 112	0.00	328.00	46.80	0.00
Junc 115	0.02	328.00	55.46	0.00
Junc 116	0.00	328.00	71.06	0.00
Junc 84	0.00	328.00	64.13	0.00
Junc 117	0.00	328.00	77.13	0.00
Junc 118	0.00	328.00	95.33	0.00
Junc 120	0.00	328.00	98.36	0.00
Junc 121	0.00	328.00	96.19	0.00
Junc 122	0.00	328.00	98.79	0.00
Junc 101	0.00	328.00	43.76	0.00
Junc 85	0.00	328.00	41.60	0.00

Node ID	Demand GPM	Head ft	Pressure psi	Quality
Junc 86	0.01	328.00	48.53	0.00
Tank 3	-0.36	328.00	5.63	0.00

SCENARIO 4
1000 ERCUs (PHO=315gpm

Network Table - Nodes

Node ID	Elevation ft	Demand GPM	Head ft	Pressure psi	Quality
Junc 98	284	0.00	327.80	18.98	0.00
Junc 40	254	1.76	327.32	31.77	0.00
Junc 39	186	4.40	327.32	61.24	0.00
Junc 7	182	3.52	327.36	62.99	0.00
Junc 4	196	3.52	327.53	56.99	0.00
Junc 9	178	9.68	327.34	64.71	0.00
Junc 12	171	5.28	327.33	67.74	0.00
Junc 19	168	11.44	327.28	69.02	0.00
Junc 22	164	7.04	327.28	70.75	0.00
Junc 24	165	3.52	327.28	70.32	0.00
Junc 20	166	0.00	327.28	69.88	0.00
Junc 25	161	1.76	327.28	72.05	0.00
Junc 29	142	0.00	327.28	80.28	0.00
Junc 30	144	5.28	327.27	79.41	0.00
Junc 31	140	0.00	327.27	81.14	0.00
Junc 32	140	7.92	327.26	81.14	0.00
Junc 34	164	5.28	327.26	70.74	0.00
Junc 35	166	0.00	327.26	69.87	0.00
Junc 48	166	1.76	327.26	69.87	0.00
Junc 49	165	7.04	327.26	70.31	0.00
Junc 36	167	6.16	327.28	69.45	0.00

Node ID	Elevation ft	Demand GPM	Head ft	Pressure psi	Quality
Junc 37	168	5.28	327.28	69.01	0.00
Junc 38	186	0.00	327.33	61.24	0.00
Junc 47	166	4.40	327.26	69.87	0.00
Junc 45	178	7.04	327.26	64.67	0.00
Junc 44	198	0.00	327.26	56.01	0.00
Junc 43	202	7.92	327.26	54.28	0.00
Junc 42	202	0.00	327.28	54.29	0.00
Junc 58	210	0.00	327.25	50.80	0.00
Junc 59	213	13.20	327.25	49.50	0.00
Junc 65	222	0.88	327.25	45.61	0.00
Junc 57	202	7.04	327.25	54.27	0.00
Junc 55	178	1.76	327.25	64.67	0.00
Junc 54	167	7.92	327.25	69.44	0.00
Junc 51	161	5.28	327.25	72.04	0.00
Junc 50	158	11.44	327.25	73.34	0.00
Junc 76	148	7.04	327.25	77.67	0.00
Junc 75	163	10.56	327.25	71.17	0.00
Junc 72	178	7.04	327.24	64.67	0.00
Junc 70	200	2.64	327.24	55.13	0.00
Junc 69	216	2.64	327.23	48.19	0.00
Junc 68	218	11.44	327.24	47.33	0.00
Junc 67	210	5.28	327.24	50.80	0.00

Node ID	Elevation ft	Demand GPM	Head ft	Pressure psi	Quality
Junc 81	180	7.92	327.21	63.79	0.00
Junc 82	190	7.04	327.21	59.45	0.00
Junc 102	227	0.00	327.06	43.36	0.00
Junc 99	234	1.76	327.70	40.60	0.00
Junc 100	190	3.52	327.68	59.66	0.00
Junc 103	191	6.16	327.05	58.95	0.00
Junc 108	224	8.80	327.01	44.63	0.00
Junc 107	100	5.28	327.00	98.36	0.00
Junc 109	221	5.28	327.00	45.93	0.00
Junc 110	224	8.80	326.06	44.22	0.00
Junc 111	219	12.32	327.01	46.80	0.00
Junc 112	220	4.40	327.02	46.37	0.00
Junc 115	200	16.72	327.04	55.05	0.00
Junc 116	164	0.00	327.09	70.67	0.00
Junc 84	180	2.64	327.20	63.78	0.00
Junc 117	150	0.88	327.09	76.73	0.00
Junc 118	108	4.40	327.09	94.93	0.00
Junc 120	101	0.00	327.09	97.96	0.00
Junc 121	106	0.00	327.09	95.80	0.00
Junc 122	100	4.40	327.09	98.40	0.00
Junc 101	227	3.52	327.08	43.37	0.00
Junc 85	232	1.76	327.28	41.29	0.00

Node ID	Elevation ft	Demand GPM	Head ft	Pressure psi	Quality
Junc 86	216	5.28	327.25	48.21	0.00
Tank 3	315	-315.04	328.00	5.63	0.00

APPENDIX E

Water Loss Action Plan

2014 WATER LOSS CONTROL ACTION PLAN
FOR
VADER-ENCHANTED VALLEY WATER SYSTEM (WSDOH #90900)

INTRODUCTION

Lewis County began managing the Vader-Enchanted Valley Water System on January 1, 2011 upon receivership of the water system. Although transfer of the ownership of the system has not been reached between the City of Vader (City) and Lewis County at the time of writing this plan, Lewis County has been actively working toward controlling distribution system leakage. The goal of the water loss action plan (WLAP) for the system is to be at 20% or less by the end of the planning period which is 2020. This goal is established as a requirement of the Water Use Efficiency Rule.

SUMMARY

A summary of the water volumes produced, accounted usages and unaccounted usages (losses) is provided. Care should be used when reviewing these numbers because of the unknown method used by the City for the derivation of the accounted usage volumes and other variables. Another unknown is the duration of the year. We use a billing year which is from December through November. However, the data shows increasing non-revenue losses from 2000. We know there were about 16 main breaks from 2006 to 2010 of which about 9 breaks occurred in 2010. This may explain the high non-revenue loss in 2010 along with the fact we started reporting in 2010 with limited information of authorized water uses by the City for 2010.

TABLE OF WATER USE EFFICIENCY DATA

YEAR	METERED PRODUCED WATER	AUTHORIZED REVENUE WATER	AUTHORIZED NON-REVENUE WATER	NON-REVENUE LOSS	
	(gallons)	(gallons)	(gallons)	(gallons)	(%)
2000*	30,749,060	20,468,470		10,280,590	33.4
2005*	35,897,750	22,473,415		13,424,335	37.4
2008*					40.8
2009*	40,615,550	23,548,795		17,066,755	42.0
2010*	39,401,200	15,691,595		23,709,605	60.2
2011	31,194,300	14,371,469	780,000	16,042,831	51.4
2012	30,510,700	15,097,432	86,420	15,183,852	50.2
2013	29,288,600	14,680,005	2,145,557	12,463,038	42.6
2014	26,418,900	16,042,744	5,296,655	5,079,501	19.2

*City of Vader management and data.

Some noteworthy events to consider in the tabulation of water use efficiency (WUE) data are:

- The City purchased the Enchanted Valley water system (EVCC) in June 2009. The City had billed EVCC for water usage based on a master meter. It is unknown when the City began to bill individual EVCC users but we suspect in Dec 2009 meter reads.
- The City may have used calendar year and halved the bi-monthly meter reads for January and December.
- 2005 and 2008 figures were compiled from the May 2008 Water System Plan for the City of Vader.
- 2009 figures were taken from the annual WUE report submitted by the City. No explanation about the accounted usage volume.
- The City installed the "meter to record volumes sent to the system in 2008. This is based on the meter tags that noted a meter testing date of October 31, 2008. Prior to installation of the meter, the produced volume was based on volume sent to clearwell-tank with adjustments for plant operation volumes.
- The City did not meter water usage for their fire station, wastewater treatment plant, parks and other city facilities. It is unknown how and if these volumes were considered for accounted usage.
- The City operated the system from November to December 2010 under the management supervision of Lewis County.

Overlooking the uncertainties of the data up to 2010, there is a trend of decreasing volumes of produced water. Less finished water is sent to the system after repairs of mains, service lines and hydrants. Lewis County undertook an extensive water main replacement project complete with new service lines and meters which was completed in December 2012. Service meters will be replaced throughout the system by mid-2015 so that effort will hopefully lower the non-revenue losses.

METHODS

Lewis County Utility staff has outlined the following activities to determine real and apparent losses. The Utility staff is comprised of engineering, operations and fiscal personnel.

1. Accounting and Billing.
   - ☑ Lewis County will evaluate the City's inactive account list with the bimonthly meter read reports, notify non-paying city customers with locked meters about current utility fees, promptly address delinquent accounts, and continue ongoing coordination with engineering and operations to maintain an active account list (aka Master Meter List).
   - ☑ Service meters have been installed at city facilities.

2. Enforce Active Account List.
   - ☑ Lewis County will promptly address delinquent accounts, remove meters, take bimonthly readings of accounts with locked meters, locate hidden meters, update

Utility's meter map book, update Utility's system database, and take measures to identify and enforce unaccounted usages.

3. Plant Production Meter.
   - ☑ Lewis County will calibrate the water-sent-to-system meter at the Plant in 2013.

4. Meter Replacement Program.
   - ☑ The system uses different types of customer meters. Verification was made in June 2013 comparing readings from different types of meters with readings in the last meter read reports. No issues were found.
   - ☑ Lewis County will implement an annual program to ultimately replace all customer water service meters with meters using gallons.

5. Leak Detection Program.
   - ☑ Lewis County contracted American Leak Detection Services in 2011 for system leak detection. All problem areas were addressed and completed in August 2013.
   - ☑ Lewis County will continue to find and repair leaks throughout the system. Leak detection efforts will be on the mains in Enchanted Valley and on the 10" main from the Plan to town.

6. Fire Hydrant Use.
   - ☑ Lewis County will continue to work with the Cowlitz-Lewis County Fire District #20 to report volumes used at Utility fire hydrants for fire-fighting and tanker refills. A 2" service meter and standpipe have been constructed in 2012 at their fire station site.

7. Water Sales.
   - ☑ Lewis County has one hydrant locked and designated for contractor customers and for filling county tankers. Lewis County purchased a flow meter to measure the volume of water sold to contractors.

8. Maintenance Use.
   - ☑ Operations staff will note volumes used for hydrant exercises, leaks and repairs.

APPENDIX F

Coliform Monitoring Plan

Coliform Monitoring Plan for: Vader – Enchanted Valley Public Water Supply

A. System Information

Plan Date:_____

Water System Name Vader-Enchanted Valley Public Water Supply	**County** Lewis	**System I.D. Number** 90900E
Name of Plan Preparer Tim Elsea	**Position** County Engineer	**Daytime Phone** 360-740-2697
Sources: DOH Source Number, Source Name, Well Depth, Pumping Capacity	S01 Cowlitz River – SWTR - treated	
Storage: List and Describe	210,730 gallons effective storage	
Treatment: Source Number & Process	S01 Cowlitz River – SWTR - treated	
Pressure Zones: Number and name	1	
Population by Pressure Zone	Entire Served Population	
Number of Routine Samples Required Monthly by Regulation:	1	
Number of Sample Sites Needed to Represent the Distribution System:	4	
***Request DOH Approval of Triggered Source Monitoring Plan?**	Yes ☐ No ☒	

*If approval is requested a fee will be charged for the review.

B. Laboratory Information

Laboratory Name Lewis County	**Office Phone 360-740-1237** **After Hours Phone 360-989-5850**
Address 360 NW North Street, Chehalis, WA 98532	**Cell Phone 360-989-5850** **Email** Vickie.metsker@lewiscountywa.gov
Hours of Operation 8-5 Monday - Friday	
Contact Name Vickie Metsker – 360-740-1237 – Meredith Jones – 360-740-1231	
Emergency Laboratory Name Water Management Labs	**Office Phone 253-531-3121** **After Hours Phone - -**
Address 1515 80th Street E., Tacoma, WA 98404	**Cell Phone - -** **Email** _____
Hours of Operation 7 days per week	

Contact Name
_____

C. Wholesaling of Groundwater

	Yes	No
We are a consecutive system and purchase groundwater from another water system.	☐	☐
If yes, Water System Name: Contact Name: Telephone Numbers Office - - After Hours - -		
We sell groundwater to other public water systems.	☐	☐
If yes, Water System Name: Contact Name: Telephone Numbers Office - - After Hours - -		
If yes, Water System Name: Contact Name: Telephone Numbers Office - - After Hours - -		
If yes, Water System Name: Contact Name: Telephone Numbers Office - - After Hours - -		
If yes, Water System Name: Contact Name: Telephone Numbers Office - - After Hours - -		
If yes, Water System Name: Contact Name: Telephone Numbers Office - - After Hours - -		

D. Routine, Repeat, and Triggered Source Sample Locations*

Location/Address for Routine Sample Sites	Location/Address for Repeat Sample Sites	Following Month Routine Sample Location	Groundwater Sources for Triggered Sample Sites**
X1. A/6th Street	**1-1. Original Sample Site**	**X2**	**S N/A**
507 A Street (Primary) 509 A Street (Alternate)	**1-2. 603 B. Street (Upstream)**		**S N/A**
	1-3. 202 6th Street (Downstream)		**S N/A**
			S N/A
			S N/A
X2. Enchanted Valley Drive N/Little Pinto Court	**2-1. Original Sample Site**	**X3**	**S N/A**
1003 SR 506 (Primary) 108 Enchanted Valley Drive (Alternate)	**2-2. 103 Little Pinto Court (Upstream)**		**S N/A**
	2-3. 106 Enchanted Valley Drive N (Downstream)		**S N/A**
			S N/A
			S N/A
X3. B/9th Street	**3-1. Original Sample Site**	**X4**	**S N/A**
816 B Street (Primary) 909 B Street (Alternate)	**3-2. 725 B Street (Upstream)**		**S N/A**
	3-3. 826 A Street (Downstream)		**S N/A**
			S N/A

X4 Park Road/F Street	**3-1. Original Sample Site**	**X1**	**S N/A**
806 10th Street (Primary) 720 Park Road (Alternate)	**3-2. 1031 F Street (Upstream)**		**S N/A**
	3-3. 111 Park Place (Downstream)		**S N/A**
			S N/A

*NOTE: If you need more than three routine samples to cover the distribution system, attach additional sheets as needed.

**** When you collect the repeats, you must sample every groundwater source that was in use when the original routine sample was collected.**

Important Notes for Sample Collector:

If there is a total coliform positive number; contact the WSDOH Regional Office (Southwest Regional Office, SWRO) to just report it.

If there is an E. coli positive sample, contact the SWRO or emergency number immediately. Follow up with sampling at repeat sites and with all WSDOH instructions. – DOH after Hours Hotline Number = 1-877-481-4901

Contact your local DOH Coliform Monitoring & Water Quality contact at all times when system coliform monitoring samples are unsatisfactory

E. Reduced Triggered Source Monitoring Justification (add sheets as needed):

F. Routine Sample Rotation Schedule

Month	Routine Site(s)	Month	Routine Site(s)
January	X1	July	X3
February	X2	August	X4
March	X3	September	X1
April	X4	October	X2
May	X1	November	X3
June	X2	December	X4

G. Level 1 and Level 2 Assessment Contact Information

Name John Strom	Office Phone 360-740-1123 After Hours Phone 360-520-2433
Address 2025 NE Kresky Ave., Chehalis, WA 98532	Email john.strom@lewiscountywa.gov
Name Fred Terry	Office Phone 360-740-1123 After Hours Phone 360-785-0815
Address 2025 NE Kresky Ave., Chehalis, WA 98532	Email fred.terry@lewiscountywa.gov

H. *E. coli*-Present Sample Response

Distribution System *E. coli* Response Checklist				
Background Information	**Yes**	**No**	**N/A**	**To Do List**
We inform staff members about activities within the distribution system that could affect water quality.	☐	☐	☐	☐
We document all water main breaks, construction & repair activities, and low pressure and outage incidents.	☐	☐	☐	☐
We can easily access and review documentation on water main breaks, construction & repair activities, and low pressure and outage incidents.	☐	☐	☐	☐
Our Cross-Connection Control Program is up-to-date.	☐	☐	☐	☐
We test all cross-connection control devices annually as required, with easy access to the proper documentation.	☐	☐	☐	☐
We routinely inspect all treatment facilities for proper operation.	☐	☐	☐	☐
We identified one or more qualified individuals who are able to conduct a Level 2 assessment of our water system.	☐	☐	☐	☐
We have procedures in place for disinfecting and flushing the water system if it becomes necessary.	☐	☐	☐	☐
We can activate an emergency intertie with an adjacent water system in an emergency.	☐	☐	☐	☐
We have a map of our service area boundaries.	☐	☐	☐	☐
We have consumers who may not have access to bottled or boiled water.	☐	☐	☐	☐
There is a sufficient supply of bottled water immediately available to our customers who are unable to boil their water.	☐	☐	☐	☐
We have identified the contact person at each day care, school, medical facility, food service, and other customers who may have difficulty responding to a Health Advisory.	☐	☐	☐	☐
We have messages prepared and translated into different languages to ensure our consumers will understand them.	☐	☐	☐	☐
We have the capacity to print and distribute the required number of notices in a short time period.	☐	☐	☐	☐
Policy Direction	**Yes**	**No**	**N/A**	**To Do List**
We have discussed the issue of *E. coli*-present sample results with our policy makers.	☐	☐	☐	☐
If we find *E. coli* in a routine distribution sample, the policy makers want to wait until repeat test results are available before issuing advice to water system customers.	☐	☐	☐	☐
(Cont.)				

Distribution System *E. coli* Response Checklist

Potential Public Notice Delivery Methods	Yes	No	N/A	To Do List
It is feasible to deliver a notice going door-to-door.	☐	☐	☐	☐
We have a list of all of our customers' addresses.	☐	☐	☐	☐
We have a list of customer telephone numbers or access to a Reverse 9-1-1 system.	☐	☐	☐	☐
We have a list of customer email addresses.	☐	☐	☐	☐
We encourage our customers to remain in contact with us using social media.	☐	☐	☐	☐
We have an active website we can quickly update to include important messages.	☐	☐	☐	☐
Our customers drive by a single location where we could post an advisory and expect everyone to see it.	☐	☐	☐	☐
We need a news release to supplement our public notification process.	☐	☐	☐	☐

Distribution System *E. coli* Response Plan

If we have *E. coli* in our distribution system we will immediately:

1. Call DOH.
2. Collect repeat and triggered source samples per Part D. Collect additional investigative samples as necessary.
3. Issue precautionary Boil Water Advisory
4. If sample is confirmed – Issue Acute notification – notify residents through Lewis County Alert System
5. Take sample from treated water tap at plant and take from all Routine Sample Sites
6. Determine if the system can isolate certain distribution lines to protect the users
7. Refer Staff to Emergency Response Plan
8. Discuss with DOH whether to issue a Health Advisory based on the findings of steps 3-6.

E. coli-Present Triggered Source Sample Response Checklist – All Sources

Background Information	Yes	No	N/A	To Do List
We review our sanitary survey results and respond to any recommendations affecting the microbial quality of our water supply.	☐	☐	☐	☐
We address any significant deficiencies identified during a sanitary survey.	☐	☐	☐	☐
There are contaminant sources within our Wellhead Protection Area that could affect the microbial quality of our source water, and If yes, we can eliminate them.	☐ ☐	☐ ☐	☐ ☐	☐ ☐
We routinely inspect our well site(s).	☐	☐	☐	☐
We have a good raw water sample tap installed at each source.	☐	☐	☐	☐
After we complete work on a source, we disinfect the source, flush, and collect an investigative sample.	☐	☐	☐	☐
Public Notice	**Yes**	**No**	**N/A**	**To Do List**
We discussed the requirement for immediate public notice of an *E. coli*-present source sample result with our water system's governing body (board of directors or commissioners) and received direction from them on our response plan.	☐	☐	☐	☐
We discussed the requirement for immediate public notice of an *E. coli*-present source sample result with our wholesale customers and encouraged them to develop a response plan.	☐	☐	☐	☐
We have prepared templates and a communications plan that will help us quickly distribute our messages.	☐	☐	☐	☐

E. coli-Present Triggered Source Sample Response Checklist – Source S__*				
Alternate Sources	**Yes**	**No**	**N/A**	**To Do List**
We can stop using this source and still provide reliable water service to our customers.	☐	☐	☐	☐
We have an emergency intertie with a neighboring water system that we can use until corrective action is complete (perhaps for several months).	☐	☐	☐	☐
We can provide bottled water to all or part of the distribution system for an indefinite period.	☐	☐	☐	☐
We can quickly replace our existing source of supply with a more protected new source.	☐	☐	☐	☐
Temporary Treatment	**Yes**	**No**	**N/A**	**To Do List**
This source is continuously chlorinated, and our existing facilities can provide 4-log virus treatment (CT = 6) before the first customer. If yes, at what concentration? _____ mg/L	☐	☐	☐	☐
We can quickly introduce chlorine into the water system and take advantage of the existing contact time to provide 4-log virus treatment to a large portion of the distribution system.	☐	☐	☐	☐
We can reduce the production capacity of our pumps or alter the configuration of our storage quantities (operational storage) to increase the amount of time the water stays in the system before the first customer to achieve CT = 6.	☐	☐	☐	☐
We can alter the demand for drinking water (maximum day or peak hour) through conservation messages to increase the time the water is in the system prior to the first customer in order to achieve 4-log virus treatment with chlorine.	☐	☐	☐	☐

*NOTE: If your system has multiple sources, you may want to complete a separate checklist for each source.

E. coli-Present Triggered Source Sample Response Plan – Source ___

If we have *E. coli* in Source ___ water we will immediately:

1. Call DOH.
2. _____ ____
3. _____ ____
4. _____ ____
5. _____ ____

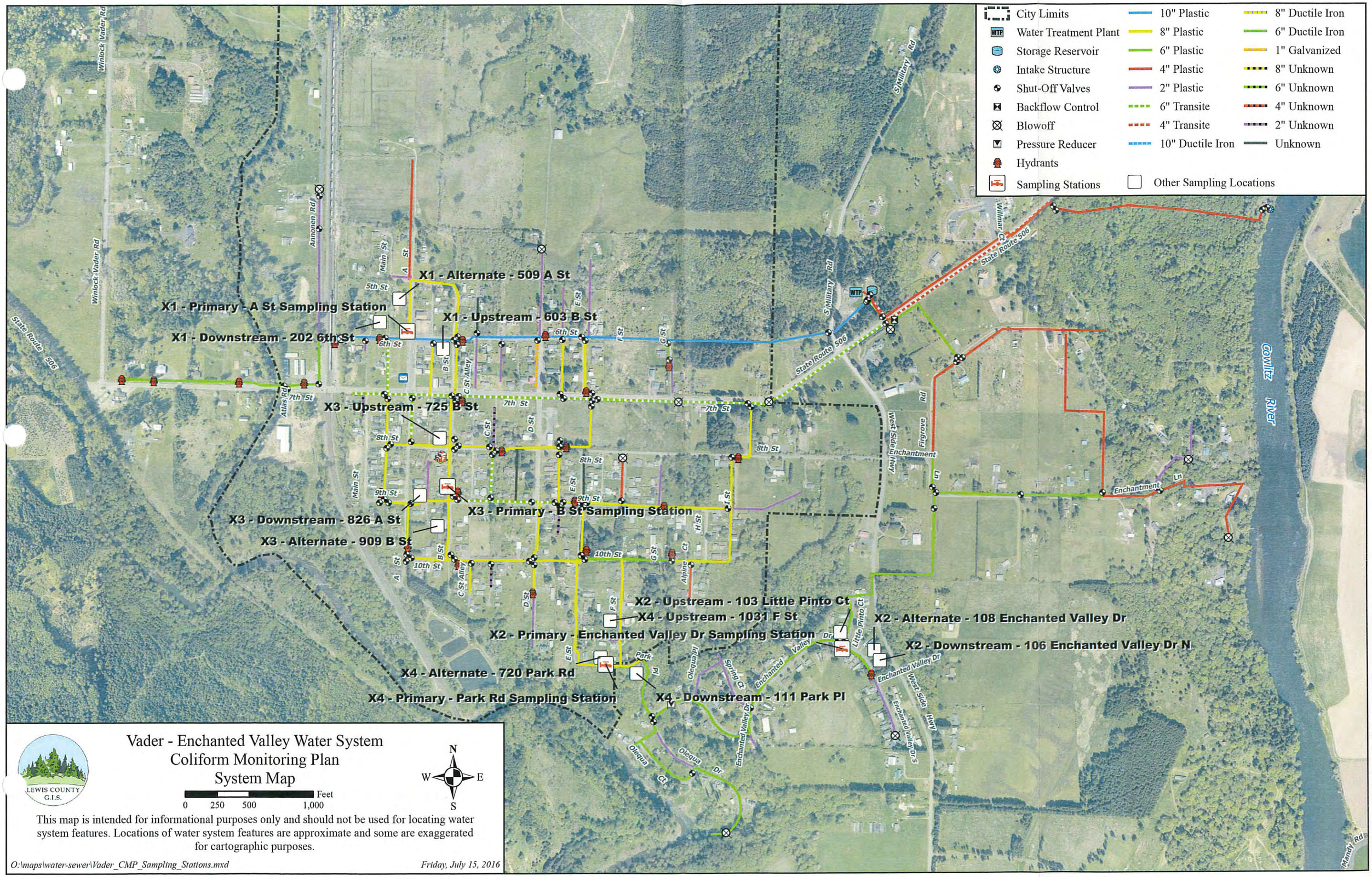
City Limits
Water Treatment Plant
Storage Reservoir
Intake Structure
Shut-Off Valves
Backflow Control
Blowoff
Pressure Reducer
Hydrants
Sampling Stations
10" Plastic
8" Plastic
6" Plastic
4" Plastic
2" Plastic
6" Transite
4" Transite
10" Ductile Iron
8" Ductile Iron
6" Ductile Iron
1" Galvanized
8" Unknown
6" Unknown
4" Unknown
2" Unknown
Unknown
Other Sampling Locations
X1 - Alternate - 509 A St
X1 - Primary - A St Sampling Station
X1 - Upstream - 603 B St
X1 - Downstream - 202 6th St
X3 - Upstream - 725 B St
X3 - Downstream - 826 A St
X3 - Alternate - 909 B St
X3 - Primary - B St Sampling Station
X2 - Upstream - 103 Little Pinto Ct
X4 - Upstream - 1031 F St
X2 - Alternate - 108 Enchanted Valley Dr
X2 - Primary - Enchanted Valley Dr Sampling Station
X2 - Downstream - 106 Enchanted Valley Dr N
X4 - Alternate - 720 Park Rd
X4 - Primary - Park Rd Sampling Station
X4 - Downstream - 111 Park Pl
Winlock Vader Rd
Annonen Rd
Main St
A St
5th St
6th St
7th St
8th St
9th St
10th St
B St
C St
C St Alley
D St
E St
F St
G St
H St
Alpine Ct
Atlas Rd
State Route 506
S Military Rd
Willmar Dr
West Side Hwy
Firgrove Rd
Enchantment Ln
Little Pinto Ct
Enchanted Valley Dr
Enchanted Valley Dr S
Spring Ct
Olequa Pl
Olequa Dr
Olequa Ct
Park Pl
Cowlitz River
Mandy Rd
WTP
Vader - Enchanted Valley Water System
Coliform Monitoring Plan
System Map
LEWIS COUNTY G.I.S.
0 250 500 1,000 Feet
N
W
E
S
This map is intended for informational purposes only and should not be used for locating water system features. Locations of water system features are approximate and some are exaggerated for cartographic purposes.
O:\maps\water-sewer\Vader_CMP_Sampling_Stations.mxd
Friday, July 15, 2016

RTCR Level 1 Assessment Guidance Template

331-569, March 2016

Send your assessment to:

Eastern Region	16201 East Indiana Avenue, Suite 1500 Spokane Valley, WA 99216	Phone: [redacted]9.329.2100 Fax: [redacted]9.329.2104 Email: mark.steward@doh.wa.gov
Northwest Region	20425 72nd Ave. South, Suite 310 Kent, WA 98032-2358	Phone: 253.395.6750 Fax: 253.395.6760 Email: dw.nwro@doh.wa.gov
Southwest Region	PO Box 47823 Olympia, WA 98504-7823	Phone: 360-236-3030 Fax: 360-664-8058 Email: swro.coli@doh.wa.gov

Water System Name:	County:	Water System ID #:
Operator in Responsible Charge (ORC):	ORC Phone:	Water System Mailing Address:
ORC Address, City, State:		
Assessor Name:		
Assessor Address, City, State, Zip:		
Date(s) Assessment Completed:		

Your water system exceeded a treatment technique trigger for the Revised Total Coliform Rule. Assess the water system's condition and operation using this *Level 1 Assessment Template* as a guide.

Part A: Respond to each item below. Identify corrective actions taken to address the issue(s) found.
Part B: Summarize your findings and include an action plan with timetable for corrective actions not yet taken.

For parts A and B, include additional information (photos or other documentation) as needed to depict assessment findings and corrective actions that have been completed. All assessment elements listed in this template must be addressed in your assessment. Systems with multiple facilities such as wells or storage tanks may need to provide additional pages.

Within 30 days of learning of the treatment technique trigger, submit completed assessment documentation to your regional office and keep a copy in your water system files.

Part A: Assessment		Corrective action needed?	Corrective action(s) taken & date taken
1. Site and Sampling Protocol 1a. Do you have a written coliform monitoring plan & sampling procedure that ensures samples are representative of the distribution system?	☐ Yes ☐ No	☐ Yes ☐ No	
1b. Have there been any changes in sampling conditions or procedures that may have contributed to the treatment technique trigger? Describe:	☐ Yes ☐ No	☐ Yes ☐ No	
1c. Inspect the sampling sites: - Are the sampling locations free of potential sources of contamination? - Are the sampling taps in good condition? - Other: (describe) _____	☐ Yes ☐ No ☐ N/A ☐ Yes ☐ No ☐ N/A ☐ Yes ☐ No ☐ N/A	☐ Yes ☐ No ☐ Yes ☐ No ☐ Yes ☐ No	

Part A: Assessment		Corrective action needed?	Corrective action(s) taken & date taken
2. Distribution 2a. Do you have procedures in place to ensure proper maintenance of the distribution system, including: - Appropriate pipe replacement and repair procedures - Replacement and repair of other distribution system components - Regular flushing program - Routine vault inspections - Fully implemented cross connection control program - Maintain positive pressure in all parts of the distribution system	 ☐ Yes ☐ No ☐ Yes ☐ No ☐ Yes ☐ No ☐ N/A ☐ Yes ☐ No ☐ N/A ☐ Yes ☐ No ☐ Yes ☐ No	 ☐ Yes ☐ No ☐ Yes ☐ No ☐ Yes ☐ No ☐ Yes ☐ No ☐ Yes ☐ No ☐ Yes ☐ No	
2b. Has there been any recently reported low pressure (<20 PSI) or complete loss of pressure in the distribution system?	☐ Yes ☐ No	☐ Yes ☐ No	
2c. Have there been any changes in distribution conditions or operations that may have contributed to the treatment technique trigger? Describe:	☐ Yes ☐ No	☐ Yes ☐ No	
2d. Inspect the distribution system: - Are there any visible line breaks or leaks? - Are there any observed unprotected cross connections? - Is there any evidence of vandalism or other security breaches? - Other: (describe) _____	 ☐ Yes ☐ No ☐ Yes ☐ No ☐ Yes ☐ No ☐ Yes ☐ No ☐ N/A	 ☐ Yes ☐ No ☐ Yes ☐ No ☐ Yes ☐ No ☐ Yes ☐ No	
3. Storage Facilities 3a. Does your water system have a water storage tank? *If no, skip to Section 4.*	☐ Yes ☐ No		
3b. Do you have procedures in place for periodic inspection and maintenance of the exterior and interior of each storage facility?	☐ Yes ☐ No	☐ Yes ☐ No	
3c. Have there been any changes in storage conditions or operations that may have contributed to the treatment technique trigger? Describe:	☐ Yes ☐ No	☐ Yes ☐ No	
3d. Inspect the storage facilities: - Does the tank have any cracks or other openings? - Is the reservoir roof free of any unprotected openings? - Is the access hatch constructed and sealed to keep contaminants out? - If there is an air vent on the storage tank, is it constructed to prevent the entry of contaminants? - Is the overflow line constructed to prevent contaminants from entering the tank? - If the overflow line discharges into a storm drain, to surface water, or directly into a sanitary sewer, is it protected by a proper air gap? - Is there any evidence of vandalism or other security breaches? - Other: (describe) _____	 ☐ Yes ☐ No ☐ Yes ☐ No ☐ Yes ☐ No ☐ Yes ☐ No ☐ N/A ☐ Yes ☐ No ☐ Yes ☐ No ☐ N/A ☐ Yes ☐ No ☐ Yes ☐ No ☐ N/A	 ☐ Yes ☐ No ☐ Yes ☐ No ☐ Yes ☐ No ☐ Yes ☐ No ☐ Yes ☐ No ☐ Yes ☐ No ☐ Yes ☐ No	

Part A: Assessment		Corrective action needed?	Corrective action(s) taken & date taken
4. Source--Groundwater 4a. Does your water system have a well or spring? If no, skip to Section 6.	☐ Yes ☐ No		
4b. Do you comply with Sanitary Control Area requirements (WAC 246-290-135(2)?	☐ Yes ☐ No	☐ Yes ☐ No	
4c. Have there been any changes in source conditions or operations that may have contributed to the treatment technique trigger? Describe:	☐ Yes ☐ No	☐ Yes ☐ No	
4d. Inspect the source facilities: - Is the sanitary control area free of all potential sources of contamination? - Is the wellhead or spring box above grade with uo potential for flooding? - Is the pressure tank water logged? - Is the well cap sealed and watertight, and the well casing free of unprotected openings? - (For springs) Is the spring box (structure, hatch, and overflow) free of any unprotected openings? - Other: (describe) _____	 ☐ Yes ☐ No ☐ Yes ☐ No ☐ Yes ☐ No ☐ N/A ☐ Yes ☐ No ☐ N/A ☐ Yes ☐ No ☐ N/A ☐ Yes ☐ No ☐ N/A	 ☐ Yes ☐ No ☐ Yes ☐ No ☐ Yes ☐ No ☐ Yes ☐ No ☐ Yes ☐ No ☐ Yes ☐ No	
5. Treatment--Groundwater 5a. Is any source continuously treated with a disinfectant? If no, skip to Section 6.	☐ Yes ☐ No		
5b. Do you have procedures in place for proper operation and maintenance of disinfection treatment facilities?	☐ Yes ☐ No	☐ Yes ☐ No	
5c. Have there been any changes in treatment equipment or process that may have contributed to the treatment technique trigger? Describe:	☐ Yes ☐ No	☐ Yes ☐ No	
5d. Inspect the treatment facilities: - Is the treatment system operating properly? - Is there any evidence of vandalism or other security breaches? - Other: (describe) _____	 ☐ Yes ☐ No ☐ N/A ☐ Yes ☐ No ☐ N/A ☐ Yes ☐ No ☐ N/A	 ☐ Yes ☐ No ☐ Yes ☐ No ☐ Yes ☐ No	
6. Source--Surface Water Supply (watershed) 6a. Does your water system have a surface water supply? If no, skip to Section 8.	☐ Yes ☐ No		
6b. Do you comply with Watershed Control Program requirements (WAC 246-290-135(4)?	☐ Yes ☐ No	☐ Yes ☐ No	
6c. Have there been any changes within the watershed or in raw water conditions that may have contributed to the treatment technique trigger? Describe:	☐ Yes ☐ No	☐ Yes ☐ No	

Part A: Assessment		Corrective action needed?	Corrective action(s) taken & date taken
6d. Inspect the surface water intake/headworks: - Is there evidence of problems at the intake? - Is there evidence of vandalism or other security breaches at the intake? - Other: (describe) _____	 ☐ Yes ☐ No ☐ Yes ☐ No ☐ Yes ☐ No ☐ N/A	 ☐ Yes ☐ No ☐ Yes ☐ No ☐ Yes ☐ No	
7. **Treatment—Surface Water** 7a. Do you have procedures in place for proper operation and maintenance of surface water treatment facilities?	☐ Yes ☐ No	☐ Yes ☐ No	
7b. Have there been any changes in treatment equipment or process that may have contributed to the treatment technique trigger? Describe:	☐ Yes ☐ No	☐ Yes ☐ No	
7c. Inspect the treatment facilities: - Is the treatment system operating properly? - Is there any evidence of vandalism or other security breaches? - Other: (describe) _____	 ☐ Yes ☐ No ☐ N/A ☐ Yes ☐ No ☐ N/A ☐ Yes ☐ No ☐ N/A	 ☐ Yes ☐ No ☐ Yes ☐ No ☐ Yes ☐ No	

8. Other assessment activities (describe):

Part B. Assessment Summary and Action Plan with Timetable for corrective actions not yet taken

☐ ASSESSOR: CHECK HERE if you did not identify any issues that may have directly or indirectly caused or contributed to entry of coliform bacteria into the system.

Corrective Actions Completed: ASSESSOR: Summarize the issues found and the corrective actions that have been completed and date completed

Describe issue found	Describe corrective action taken and date completed

Corrective Actions Not Completed: ASSESSOR: Describe the issues for which corrective actions have not yet been completed. **Provide an action plan with timetable for completion.**

Describe issue found	Describe planned corrective action and timetable for completion.

Print Name of Assessor: _____ Signature of Assessor: _____ Date: _____

OFFICE OF DRINKING WATER USE ONLY

APPENDIX G

Stage 2 DBPR Compliance Monitoring Plan

Washington State Department of Health
Division of Environmental Health
Office of Drinking Water
DOH 331-464
Updated July 2012

Stage 2 DBP Monitoring Plan - Surface Water (Routine Monitoring)

System Name	Vader-Enchanted Valley Water System
PWSID#	90900
Date	04/24/2013
Completed by	Shirley Kook
Population	876

Initial Stage 2 Sampling Period First sampling period following **October 1, 2013**

Number of Samples Required 2 Samples per Quarter (1 TTHM and 1 HAA5)

You are required to take individual TTHM and HAA5 samples (instead of a dual sample set at the locations with the highest TTHM and HAA5 concentrations, respectively. If the highest TTHM and HAA5 concentrations occur at the same location (and month, if monitored annually) only one location with a dual sample set per monitoring period is needed.

	Stage 2 Compliance Monitoring Site ID	Projected Sampling Date (Date or week) - every 90 days			
		Period 1	Period 2	Period 3	Period 4
Highest TTHM	X3-B St./9th St.	Nov. 18, 2013	Feb. 17, 2014	May 19, 2014	Aug. 18, 2014
Highest HAA5	X3-B St./9th St.	Nov. 18, 2013	Feb. 17, 2014	May 19, 2014	Aug. 18, 2014

Determining Compliance for TTHM and HAA5

Our system is required to monitor quarterly. Each quarter we will calculate a locational running annual average (LRAA) for TTHM and HAA5 at each monitoring location. Compliance will be achieved if the TTHM and the HAA5 LRAA at each monitoring location for the four most recent quarters is less than or equal to 0.080 mg/L for TTHM and less than or equal to 0.060 mg/l for HAA5.

Disinfectant Monitoring

Chlorine residuals must be measured at the same time and place as routine or repeat coliform samples
MRDL for chlorine and chloramines = 4.0 mg/l as Cl_2

Determining Compliance for disinfectant residuals

Compliance is based on the running annual average (RAA) of 12 consecutive months
Daily residual measurements will / will not be included in the compliance calculations (circle one)

Attach a distribution map with sample locations

Comments

You will need to print a hard copy for your records and make it available upon request. You do not need to submit a copy to DOH.

If you need this publication in an alternate format, call (800) 525-0127. For TTY/TDD call (800) 833-6388.

APPENDIX H

Title 13 Lewis County Code

Resolution of Approved Utility Rates

Design and Construction Standards

CIP Cost Estimates

Cross Connection Control Program

BEFORE THE BOARD OF COUNTY COMMISSIONERS OF LEWIS COUNTY, WASHINGTON

An Ordinance of Lewis County, WA, Repealing and Replacing LCC Title 13 Public Utilities	)) **ORDINANCE NO. 1265**)

WHEREAS, Lewis County Code (LCC) Chapter 1.05.020 authorized the Board of County Commissioners (BOCC) to amend and adopt separate ordinances for inclusion in the LCC; and

WHEREAS, in response to an immediate need to provide water service in the City of Vader to correct health and safety deficiencies, the BOCC enacted Ordinances No.1215 in 2010 and No. 1221 in 2011 authorizing and establishing requirements to construct, operate and maintain a system of sewerage and water according to RCW 36.94; and

WHEREAS, after five years of operating and managing the public Vader-Enchanted Valley Water System, it is found that new code provisions are needed to comply with all necessary state and federal regulations to provide quality potable water to our water utility customers; and

WHEREAS, the BOCC held a public hearing as required under state law to take public testimony and to consider the matter; and

WHEREAS, Ordinance No. 1265 repeals and replaces all provisions of LCC Title 13 and does not diminish any other provisions of the LCC; and

WHEREAS, the BOCC reviewed the recommendations of the Lewis County staff, considered testimony from the public and found that the proposed ordinance is in the best interest of the public.

NOW THEREFORE BE IT ORDAINED by the BOCC that it repeals and replaces LCC Title 13 with the language provided in Attachment A.

DONE IN OPEN SESSION this 22nd day of February 2016, after a public hearing was held on February 22, 2016 pursuant to notice published in the East County Journal on February 10 and 17, 2016.

APPROVED AS TO FORM:
Jonathan L. Meyer, Prosecuting Attorney

By: Civil Deputy

SEAL OF LEWIS COUNTY, WASHINGTON BOARD OF COUNTY COMMISSIONERS SINCE 1845 WASHINGTON'S 1st COUNTY

ATTEST:

Karri Muir, CMC, Clerk of the Lewis
Board of County Commissioners

BOARD OF COUNTY COMMISSIONERS
LEWIS COUNTY, WASHINGTON

P.W. Schulte, Chair

Gary Stamper, Vice Chair

Edna J. Fund, Commissioner

Ordinance No. 1265

ATTACHMENT A – Title 13 PUBLIC UTILITIES

Title 13
PUBLIC UTILITIES

Chapters:

13.05 Purpose

13.10 Definitions

13.20 General

13.30 Service

13.40 Latecomer Utility Hookups

13.50 Design Guidelines

13.60 Water

13.70 Sewer

13.80 Water and Sewer Service Connections

Chapter 13.05
PURPOSE

Sections:

13.05.010 Purpose.

13.05.010 Purpose.

The purpose of this title is to establish a comprehensive system to manage, operate, and maintain a county public utility system of sewerage, water and drainage facilities consistent with and under authority of Chapter 36.94 RCW. Chapter 36.94 RCW recognizes that the construction, operation and maintenance of a system of sewerage and water is a county purpose.

Chapter 13.10
DEFINITIONS

Sections:

13.10.010 Definitions.

13.10.010 Definitions.

"Administrator" shall mean the director of public works or his/her authorized designee.

"Applicant" shall mean a person or entity including his successors and assigns, representing the property owner and formally asking for utility services or approval from the administrator of Title 13.

"Approved air gap" means a physical separation between the free-flowing end of a potable water supply pipeline and the overflow rim of an open or non-pressurized receiving vessel.

To be an air gap approved by DOH, the separation must be at least:

(a) Twice the diameter of the supply piping measured vertically from the overflow rim of the receiving vessel, and in no case be less than one inch, when unaffected by vertical surfaces (sidewalls); and

(b) Three times the diameter of the supply piping, if the horizontal distance between the supply pipe and a vertical surface (sidewall) is less than or equal to three times the diameter of the supply pipe, or if the horizontal distance between the supply pipe and intersecting vertical surfaces (sidewalls) is less than or equal to four times the diameter of the supply pipe and in no case less than one and one-half inches.

"Approved atmospheric vacuum breaker (AVB)" means an AVB of make, model and size that is approved by DOH according to WAC 246-290-010.

"Approved backflow prevention assembly" shall mean a reduced pressure backflow assembly (RPBA), reduced pressure detector assembly (RPDA), double check valve assembly (DCVA), double check detector assembly (DCDA), pressure vacuum breaker assembly (PVBA), or spill resistant vacuum breaker assembly (SVBA) of make, model and size that is approved by the State Department of Health (DOH). Assemblies that appear on the current approved backflow prevention assemblies list developed by the University of Southern California Foundation for Cross-Connection Control and Hydraulic Research or other entity acceptable to DOH are considered approved by DOH. "Backflow assembly tester (BAT) means a person holding a valid BAT certificate issued under chapter 246-292 WAC.

"Board" shall mean the Lewis County board of county commissioners.

"Building sewer" shall mean the portion of the sewer line beginning two feet outside the outer foundation wall of the structure and extending to the edge of the right-of-way with no common sewers discharging into it. The building sewer is owned and maintained by the property owner.

"Building sewer permit" shall mean a permit issued by the county to monitor and to control work on sanitary side sewers to assure it is performed to specific and general standards.

"Commercial" shall mean any nonresidential customer who engages in business activities or combination of business and residential activities if combined through a single service meter.

"Connection" shall mean any physical connection to the utility water system by any water service or any private water system, or any pipeline extension.

"Contractor" shall mean a person, partnership, firm, corporation or joint venture contracting with the applicant to prescribed work for the applicant.

"Cost" shall mean the cost of labor, material, transportation, supervision, engineering, administration and all other necessary overhead expenses.

"County" shall mean Lewis County, Washington.

"Cross-connection" shall mean any actual or potential physical connection between a public water system or the consumer's water system and any source of non-potable liquid, solid or gas that could contaminate the potable water system by backflow.

"Cross-connection control program (CCCP)" shall mean the administrative and technical procedures the utility division implements to protect the public water system from contamination via cross-connections as required in WAC 246-290-490.

"Cross-connection control specialist (CCS)" shall mean a person holding a valid CCS certificate issued under chapter 246-292 WAC.

"Customer" shall mean any person, entity, including but not limited to an individual, firm, corporation, partnership, joint venture, limited liability entity, tribe, political subdivision, municipal corporation, state entity, federal entity or other entity, obtaining or using water service from the water system of the utility.

"Department" shall mean the department of public works of Lewis County.

"Department of Health (DOH)" shall mean the State Department of Health.

"Department of Transportation (WSDOT)" shall mean the State Department of Transportation.

"Design or construction standards" shall mean design guidance adopted by the County or approved by the Lewis County Engineer.

"Director" shall mean the director of public works or his/her authorized designee.

"Easement" shall mean the right granted by a property owner to another to make lawful and beneficial use of a defined area of the owner's property for a specific purpose created through an approved agreement.
"Ecology" shall mean the State Department of Ecology.

"Engineer" shall mean a professional engineer licensed by the state of Washington in civil engineering.

"Equivalent residential unit (ERU)" shall mean the unit used to calculate water or sewer consumption by a typical full-time single-family residence.

"Income" shall mean any gross income as defined in Section 61(a) of the Internal Revenue Code of 1954, as now in effect or hereafter amended. Gross income being described as all income from whatever source derived including but not limited to the amount of money earned before deducting for taxes, insurance, and other deductions, including income from Social Security retirement and disability, federal civil service, pensions, wages, salaries, self-employment, rental property, disability, alimony, child support, interest income and dividends, public assistance payments, unemployment compensation, trust or estate income, and retirement benefits.

"Industrial" shall be as defined in Chapter 17.10 LCC.

"Interceptor" shall mean a sewer pipe receiving flow from a number of main or trunk sewers, and force mains.

"Latecomer" shall mean any person who was not an original participant in the construction of a water or sewer system improvement or extension, and who later requests service using or benefitting from such water or sewer system improvement or extension.

"LCC" shall mean Lewis County Code.

"Local improvement district (LID)" shall mean a public improvement provided to a specific area that is specially benefitted and paid by a special assessment of a defined set of property owners benefiting from the improvement as governed by the applicable state statutes and regulations and local ordinances.

"Low- income senior citizen residential customer" shall mean a person who is a residential customer 62 years of age or older and whose total income, including that of the spouse or co-tenant of the utility account holder, does not exceed the low income figure for Community Development Block Grant (CDBG) projects in accordance with the utility division's policy.

"Low- income totally disabled residential customer" shall mean a person who is a residential customer classified as totally disabled by the Social Security Administration and whose total income, including that of the spouse or co-tenant of the utility account holder, does not exceed low income figure for Community Development Block Grant (CDBG) projects in accordance with the utility division's policy.

"Multiple dwelling" shall mean a dwelling which is either rented, leased, let or hired out, to be occupied, or is occupied as the residence or home of two or more families living independently of each other, including but not limited to residential duplexes, apartment buildings, condominiums, mobile home parks, trailer courts or similar types of multiple dwelling arrangements.

"Parcel" shall be as defined in Chapter 17.10 LCC.

"Private sewer" shall mean any portion of the sewer conveyance system or lines connected thereto, located on private property where no easements are granted to the county. Maintenance of a private sewer will be the responsibility of the property owner(s).

"Private utility system" shall mean any water or sewer system which is not part of the utility system described in this title.

"Private water" shall mean any portion of the water system not owned or managed by the utility division or not defined as public water.

"Property owner" shall mean the fee owner, as determined by the records of the County Auditor, except that with respect to property being sold under a real estate contract it means the contract purchaser, with respect to property subject to a deed of trust it means the grantor, and with respect to mortgaged property it means the mortgagor.

"Public sewer" shall mean the portion of the sanitary sewer located within the public right-of-way or easements that are owned, operated and maintained by the county.

"Public water" shall mean any system providing water for human consumption through pipes or other constructed conveyances, excluding a system serving only one single-family residence and a system with four or fewer connections all of which service residences on the same farm; as further defined in WAC 246-290-020 and RCW 70.119.020. "Residential service" shall mean water or sewer service to a single-family or multiple dwelling using water for domestic use.

"Service area" shall mean the specific area or areas a water or sewer system currently serves and where it plans to provide water or sewer service as delineated in Lewis County's water and sewer general plan

adopted under Chapter 36.94 RCW. This may be comprised of the existing service area, retail service area, future service area, and include areas where water is provided to other public water systems.

"Sewage" shall mean water carrying waste discharged from sanitary facilities.

"Sewer lateral" shall mean the section of the sanitary sewer line extending from the utility's main to the edge of the public right-of-way.

"Sewer main or trunk" shall mean a sewer pipe that received flow from one or more sewer laterals.

"Sewerage" shall mean a system of sewers.

"Sewerage and/or water general plan" shall mean the water system plan that is required and approved by DOH according to WAC 246-290-100, and the sewer system plan that is required and approved by Ecology according to WAC 173-240-050 and 173-240-060. These plans must also be adopted into the Lewis County comprehensive plan.

"Side sewer" shall mean the same as "sewer lateral."

"Standard Plans" shall mean the most recent Lewis County development standard detail plans approved in Titles 13 and 15 of the LCC as administered by the Department of Public Works.

"Standard specifications" shall mean the most recent edition of the Standard Specifications for Road, Bridge and Municipal Construction, as published by the Washington State Department of Transportation, and the Washington State Chapter of the APWA Standard Plans for Road, Bridge and Municipal Construction, and any amendments.

"Utility" shall mean the water and sewer systems owned or managed by the utility division.

"Utility division" shall mean the utility division within Lewis County public works.

"Utility local improvement district (ULID)" shall mean a public utility improvement provided to a specific area that is specially benefitted and paid by a special assessment of a defined set of property owners benefiting from the improvement. The difference between an LID and a ULID is that utility revenues are pledged to the repayment of the ULID debt along with the assessments on the benefitted properties.

"Utility review committee" shall mean a committee created by the board of county commissioners pursuant to LCC 13.20.030.

"Water service installation" shall mean that portion of a public water line from a water main or stub line of a water main to the water meter of the customer to be served. A water service installation consists of a saddle, corporation stop, water services line, meter setter, meter, meter box, and appurtenances required to furnish water service.

"Water system plan" shall mean a water system plan prepared to include the operational, technical, managerial and financial capability to address present and future needs consistent with applicable, relevant land use plans that is approved by DOH per WAC 246-290-100.

Chapter 13.20
GENERAL

Sections:

13.20.010 Administration.

13.20.020 Utility division.

13.20.025 Applicability.

13.20.030 Utility review committee.

13.20.040 Connection fees and rates.

13.20.050 Liability.

13.20.060 Violations and appeals.

13.20.010 Administration.

The board appoints the director of public works to be the administrator of the utility division and delegates, grants and conveys to him or her such duties, responsibilities and authority as are necessary and proper to manage and operate the utility system consistent with state law and regulations and the rules and regulations adopted by Lewis County. The administrator is authorized to:

(1) Adopt and implement regulations that are reasonably necessary to implement the provisions of this chapter pursuant to state law and regulations and county ordinances and regulations.

(2) Amend the design or construction standards in accordance with sound engineering standards and practices.

(3) Administer the planning, design, acquisition, construction, maintenance, operation, and capital improvement plans and programs of the utility system.

(4) Propose fees, charges, rates and deposits for installation, inspections, permits, connections, usage and other services of which shall be set by the board in accordance with state law.

(5) Perform inspections and undertake enforcement as necessary to ensure compliance with this chapter.

13.20.020 Utility division.

For the purpose of implementing the provisions and aims of this title, a Lewis County utility division within the Lewis County department of public works is hereby created and established consistent with RCW 36.94.120.

13.20.025 Applicability.

The provisions of this chapter shall apply to all properties within the utility service area. No water or sewer service shall be extended beyond the service area boundaries as identified in a sewerage or water general plan without proper amendment of such utility service area.

13.20.030 Utility review committee.

Prior to any establishment, acquisition or construction of a public sewerage or water system, the adoption of a new, amended or revised sewerage or water general plan for that service area is required. The board shall submit the document to a utility review committee with a membership consistent with RCW 36.94.050 for each service area, or create a utility review committee for the entire county. The utility review committee shall be set by board resolution. If the board rejects the sewerage or water general plan for that service area, then the utility review committee is deemed to be dissolved; otherwise the utility review committee shall continue in existence to review the amendments to the plan.

13.20.040 Fees, charges, rates, deposits and normal working hours.

Fees, charges, rates, deposits and normal working hours for water and sewer service shall be set by the board by resolution. All fees, charges, rates and deposits for installation, inspection, permits, connections, usage and other utility services shall be in accordance with the current Lewis County rate schedule as approved by the board.

The board may consider the following factors in establishing service rates and fees:

(1) Differences in costs of service.

(2) Differences in class of customers or service.

(3) Quantity and quality of the treated sewage and delivered water.

(4) Capital contributions made to the utility system.

(5) Debt and outstanding loans of the utility system.

(6) Composition of customer base.

(7) Record of public health violations.

(8) Complexity of the utility system.

(9) Availability of utility resources.

13.20.050 Liability.

Pursuant to RCW 36.94.480, where Lewis County assumes responsibility for a water system that is not in compliance with state or federal requirements for public drinking water systems, Lewis County and its agents and employees are immune from lawsuits or causes of action based on noncompliance with state or federal requirements for public drinking water systems which predate the date of assuming responsibility and continue after the date of assuming responsibility, provided that the county has submitted and complying with a plan and schedule of improvements approved by the State Department of Health. This immunity shall expire on the earlier of the date the plan of improvements is completed or four years from

the date of assuming responsibility. This immunity does not apply to intentional injuries, fraud or bad faith.

13.20.060 Violations and appeals.

(1) General.

(a) An applicant's, property owner's, or customer's failure to comply with this title shall be cause for withholding or withdrawing approval of overall project plans, forfeiture of the financial guarantee submitted to the county, and non-acceptance of portions of the work.

(b) The county utility division may require the applicant, customer or property owner to remove or replace illegal utilities and other items associated with this title that were not properly permitted. The county utility may perform the work at the property owner's or applicant's expense. The cost of such work shall be per LCC 13.10.010.

(c) No connections shall be allowed to the county utility system until all conditions of approval are met.

(d) Nothing contained herein supplants or replaces any greater penalty or other remedy provided under state or federal law.

(2) Enforcement Actions. The county shall have the authority to enforce this title as well as other referenced or pertinent regulations or specifications. The utility division will appoint project engineers, assistants, and inspectors as necessary to inspect the work and they will exercise such authority as the administrator may delegate.

(3) Stop Work Orders. Should the county become aware of conditions that invalidate the original design data used to obtain the permit or determine that the applicant or property owner is not complying with the conditions of the permit or approved plans, the county may revoke the original permit and order work stopped on the project. Examples of reasons why the county may order all or part of the permitted work stopped include but are not limited to the following:

(a) Failure to comply with the conditions of the permit.

(b) The permit was granted on the basis of erroneous or incomplete information submitted to the utility division.

(c) The weather or weather-related conditions caused off-site or downstream drainage problems.

(d) The work has created a condition that is a hazard to life, endangers property, or adversely affects the use or stability of the work.

(4) Cease and Desist Orders. The county may serve a cease and desist order for violations of this title. The order shall include the following:

(a) Description of violation.

(b) Effective date, such as immediately upon receipt by the person or entity to whom the order is directed.

(c) Compliance outcome such as failure to comply with terms of a cease and desist order can result in enforcement action including but not limited to issuance of a civil infraction citation.

(d) Corrective measures.

(5) Civil Infraction. Any person or entity (including but not limited to a natural person, a firm, corporation, partnership, joint venture, limited liability corporation, limited liability partnership, or limited liability entity) violating any provisions of this title shall be deemed guilty of a misdemeanor and, upon conviction thereof, shall be punished by a fine of not more than $250.00 per violation or by imprisonment for not more than 90 days as set forth in Chapter 1.20 LCC. Each such person, or entity found guilty of a violation shall be deemed guilty of a separate offense for each and every day during any portion of which any violation of any provision of this title is committed, continued or permitted by such person or entity, and shall be punished therefor.

13.20.080 Severability.

If any part of this title shall be found invalid, all other parts shall remain in effect.

Chapter 13.30
SERVICE

Sections:

13.30.100 Application, review and approval.

13.30.110 Water meters.

13.30.120 Violation of utility regulations.

13.30.130 Water and sewer system extension requirements.

13.30.140 Service connections required within local improvement district.

13.30.200 Variance.

13.30.300 Easements.

13.30.400 Inspections - Required.

13.30.410 Right of entry.

13.30.500 Correction of unsafe conditions.

13.30.510 Unlawful discharges to county sewers.

13.30.600 Maintenance of utility systems.

13.30.700 Water conservation.

13.30.800 Interlocal agreements.

13.30.100 Application, review and approval.

No person or entity may connect to, extend or alter the water or sewer system without making application to and receiving approval by the utility division. A complete application along with written approvals from the local community development authority for consistency with the local approved comprehensive plan, development regulations and applicable standards, written approval from the local building authority for the structure to be served, and any other information that may be required or requested by the utility division must be submitted to determine proposed water demands, cross connection control measures and other potential impacts to the water or sewer system. If the administrator determines that the proposed action complies with the regulations of this chapter, the utility division will approve the application with any conditions necessary and proper to accomplish the purposes of this chapter. The utility division shall not approve any application for water service unless a satisfactory water main exists, capable of meeting the requirements for pressure, circulation, storage, source of supply, conveyance and other requirements established by the utility division. The utility division shall not approve any application for sewer service unless a satisfactory sewer main with adequate hydraulic and treatment exists, capable of meeting other requirements established by the utility division.

13.30.110 Water meters.

All water services shall be metered. The utility system will deliver water to users only through meters owned by Lewis County, except temporary use of fire hydrants for construction, building or related purposes may be authorized by the administrator in accordance with this chapter.

Issuance of a water meter associated with new development of the system will be per LCC 13.60.100.

13.30.120 Violation of utility system regulations.

Any person who connects to the utility system without obtaining the utility division's prior approval or who violates any section of this title shall be assessed a fine of $250.00 per violation or by imprisonment for not more than 90 days as set forth in LCC 1.20.020, which shall be in addition to all other applicable charges and costs. The property owner shall be responsible for payment of all charges. Water and sewer service will be disconnected to the premises until the charges, fees and penalties are paid and any unauthorized installation is corrected and approved by the utility division.

13.30.130 Water and sewer system extension requirements.

Requirements for water and sewer main extensions, oversizing mains and other improvements to the water and sewer systems are stated or referenced in Chapters 13.50, 13.60 and 13.70 of the Lewis County Code. All water and sewer system extensions and other system improvements shall upon completion and written acceptance by the administrator be conveyed to Lewis County and become part of the utility system.

13.30.140 Service connections required within service area

Any person having a structure with plumbing fixtures within the boundaries of a county water or sewer service area as delineated in an approved utility system plan, LID or ULID shall be required to connect to the system within 60 days after receiving notice from the department to make such connection, or as specified in applicable LID or ULID ordinance. At the end of such 60-day period, the utility division shall begin assessing service charges regardless of whether the connection has been made.

13.30.145 Non-potable water sources within service area.

Any applicant seeking to distinguish between potable and non-potable water uses on premises that have a non-potable water source must make a written request for a variance. The process applicable to that application is the process described in LCC 13.30.200.

The application shall not be approved unless it includes provisions for backflow prevention assemblies and other improvements to prevent cross-connection contamination of the potable water system per LCC 13.30.150. The applicant will be responsible for all review, construction, testing and associated costs to comply with the approval of the variance application.

13.30.150 Cross-connection Control Program.

(1) Purpose. The purpose of the Cross-connection Control Program (CCCP) is to protect the potable water system from any actual or potential physical connection of non-potable liquid, solid or gas that could contaminate the potable water system by backflow. If the utility determines that a cross-connection potential exists, no water service shall be allowed from the utility water system until approval from the administrator and the Cross-connection Control Specialist (CCS) that the connection is protected with an appropriate backflow assembly.

(2) Adoption of State Regulations. The CCS shall develop the CCCP for the utility in accordance with WAC 246-290-490, WAC 246-292 and current references as approved by DOH.

(3) Backflow prevention assembly requirement. Backflow prevention assemblies approved for use by DOH shall be installed at the discretion of the utility division for the following circumstances:
- premises and services identified in WAC 246-290-490 as severe and high health hazards;
- premises and services identified as special plumbing and activities in the CCCP for the utility system;
- internal cross connections that are not correctable or where or when it is impracticable to ascertain whether cross connections exist;
- where there is usage of toxic or hazardous materials such that, if back siphonage or back pressure should occur, a health hazard could result;
- irrigation systems;
- properties with an unapproved auxiliary water supply interconnected with the utility water system;
- properties with wells that have not been legally abandoned or where the property owner or applicant wants to connect to the utility water system;
- premises served by a fire system using chemical additives;
- premises which pose a high probability of changes in the use of water by tenants;
- premises where cross-connections are probable, unavoidable or not correctable, such as buildings served with booster pump systems; and
- where the property owner or applicant is seeking a variance pursuant to LCC 13.30.200.

(4) Installation requirement. Backflow prevention assemblies shall be installed as follows: by a licensed plumber in accordance with WAC 246-290-490; on the customer line just inside of the customer's property line and in a location acceptable to the utility division; at the point of delivery of the potable water supply, before any branch of the customer line; protected from freezing and if possible, water inundation; and in compliance with applicable plumbing requirements.

(5) Testing and repairs. All backflow assemblies installed, relocated or repaired within the service area shall be tested immediately upon installation and at least annually by a state certified backflow assembly tester (BAT) in good standing. To be in good standing, the BAT shall supply the utility division with a current certificate of accuracy for his or her testing equipment and a current BAT certificate. The test period interval will be as specified by the CSS or Administrator; but shall not be less frequently than annually. Test results shall be reported to the CSS by the BAT within one week of the date of testing.

All such assemblies not functioning properly shall be immediately repaired or replaced by the customer. If any such assembly is not immediately repaired or replaced, then the utility division may deny or discontinue utility service to the premises. All testing and repairs are the responsibility of the property owner.

(6) Notification. The utility division will notify the customer that an annual test of the backflow prevention assembly is required not less than 30 days before such annual test is required. Non-compliance on the part of the customer will result in termination of service.

(7) Costs of Compliance. All costs associated with purchase, installation, testing, replacement, maintenance, parts and repairs of the backflow assembly are the responsibility of the property owner.

(8) Approval of Cross-connection Control Program. Approval of the utility CCCP shall be by resolution for the service area.

13.30.200 Variance.

Any applicant may seek a variance in the application of the provisions of these regulations based on extraordinary conditions of topography, access, location, shape, size or other physical features of the property. The request for a variance shall be in writing and shall include a detailed statement of the technical aspects of the project that necessitate the need for a variance. A variance from design requirements will not be approved solely on the basis of financial considerations or convenience.

The applicant shall be responsible for all costs incurred in the review of the variance request regardless of whether the variance request is approved or denied. The minimum fee to process and review the variance request shall be the current approved fee applicable to Public Works deviation requests. Additional costs may include: review by utility division personnel, local, state and federal agencies; compliance measures for LCC 13.30.150; and required documentation and approvals by local, state and federal agencies. No variance will be approved that would have the effect of granting a special privilege not shared by other similar properties. The administrator will determine if the following conditions to approval have been met:

(1) There are exceptional or extraordinary conditions that apply to the project property and not to other properties in the vicinity.

(2) The approval will not adversely affect the health or safety of persons residing or working in the neighborhood, be detrimental to the public welfare, be injurious to property or improvements in the area, or be inconsistent with the comprehensive plan.

(3) The approval is consistent with other chapters of the county code and county programs.

(4) The approval for a material item or method is substantially equivalent to prescribed materials and methods.

13.30.300 Easements.

The utility division may require any person or entity seeking to connect to the utility system to provide an easement for utility system purposes as a condition to allowing such connection. Easement widths will typically be 20 feet. Construction easements will be a minimum of 30 feet including the permanent easement. Under special circumstances, the administrator or designee may require alternate easement widths.

13.30.400 Inspections - Required.
As a condition to the issuance of any permit or authorization by the utility division, each applicant shall consent to reasonable inspections by the utility division to ensure the provision of safe drinking water.

13.30.410 Right of entry.

Whenever the utility division determines that it is necessary to make an inspection to enforce any of the provisions of or perform any duty imposed by this title or other applicable health and safety law, the administrator is authorized to enter such property at any reasonable time to inspect the site and to perform any duty imposed by this chapter. The administrator shall first make reasonable efforts to contact the person responsible for the premises and shall present proper credentials to such person, and request entry onto the premises. If entry is refused, the administrator shall have recourse to every remedy provided by law to secure entry. In the event of an emergency, the administrator is authorized to enter the premises to inspect and to enforce this chapter without first attempting to contact the person responsible for the property.

13.30.500 Correction of unsafe conditions.

Whenever the administrator or designee determines that any condition on any premises is in violation, is used contrary to any provisions of this chapter, or is unsafe, the administrator or designee may order the correction or discontinuance of any such condition or activity causing such condition. The administrator or designee may take appropriate measures including the discontinuance of service to enforce any such order.

13.30.510 Unlawful discharges to county sewers.

No person or entity shall discharge or cause to be discharged, by direct or indirect means, any of the following wastes or substances into any part of the sewer system:

(1) Any rainwater from downspouts or other surface or subsurface drainage.

(2) Any liquid or vapor having a temperature higher than 150 degrees Fahrenheit.

(3) Any water or waste which may contain more than 100 parts per million by weight of fat, oil or grease.

(4) Any gasoline, benzene, naphtha, fuel oil, grease, or flammable or explosive liquid, solid or gas.

(5) Any ashes, cinders, sand, mud, straw, hair, shavings, metal, glass, rags, feathers, tar, plastic, wood, manure or other solid or viscous substance capable of causing obstruction to the flow in sewers or other interference with the proper operation of the sewer system.

(6) Any waters or wastes having a pH lower than 5.5 or higher than 9.0 or having any other corrosive property capable of causing damage or hazard to structures, equipment and personnel of the sewer system.

(7) Any waters or wastes containing a toxic or poisonous substance in sufficient quantity to injure or interfere with any sewage treatment process, constitute a hazard to humans or animals or create any hazard in the receiving waters of the sewer system.

(8) Any waters or wastes containing suspended solids of such character and quantity that unusual attention or expense is required to handle such materials at the sewage treatment plant.

(9) Any noxious or malodorous gas or substance capable of creating a public nuisance.

(10) Other discharges if determined to be incompatible with county's treatment system.

13.30.600 Maintenance of utility systems.

The responsibility of the utility division shall be limited to operation and management of water and sewer systems owned by the county, and it shall not have any responsibility with respect to private utility systems except on a contractual basis through a written agreement with the board.

13.30.700 Water conservation program.

The utility division may develop and administer any programs necessary to further water conservation or to comply with water conservation requirements of any local, state or federal agency having jurisdiction within the service area.

A Level I water supply problem may be declared at the discretion of the administrator. Voluntary water conservation measures may be requested by notice to and education of the customers about "nonessential uses" as defined in this section and in the water shortage response plan for the utility system.

A Level II water supply problem may be declared by the administrator when water usage exceeds the rate of resupply. Voluntary water conservation measures will be used including reduced or altered outdoor watering schedules.

A Level III water supply problem will be declared by the board when water supply fails to meet the demand for water and voluntary conservation measures are ineffective or are expected to be inadequate. The board's declaration will prohibit nonessential water uses as defined below, outdoor watering (except as authorized in writing by the administrator), and wasting potable water in any drainage way.

The following water uses are considered nonessential water uses: washing of any motorbike, motor vehicle, boat, trailer, airplane or other vehicle except at a commercial self-contained washing facility; hosing of any sidewalks, walkways, driveways, parking lots, tennis courts or other hard surfaced areas, buildings or structures; filling and refilling of any indoor or outdoor swimming and jacuzzi pools (except where authorized for neighborhood fire control or as required by a medical doctor's prescription); using water in a fountain or pool for aesthetic purposes (except where needed to support fish life); serving water to a customer in a restaurant unless requested by the customer; drawing water from hydrants for construction, fire drills, recreation and non-firefighting purposes; using water for dust control; and irrigating water for recreational fields, golf courses and grounds.

If the administrator determines that any customer failed to comply with the provisions pertaining to a Level III water emergency, then a written warning notice shall be delivered to the customer's residence or posted at the front entrance of the residence. If the customer fails to comply with the conditions stated in the notice, the administrator may authorize disconnection of the customer's water service. Service so disconnected shall be restored only upon compliance with the applicable conditions stated in the notice, payment to unlock or turn the meter on, payment of the service meter charge and other costs incurred in the discontinuance of service, and assurance that the action causing the discontinuance will not be repeated. Prior to restoration of service and if the administrator determines it is appropriate, the utility may install a flow restrictive device on the customer's service line at the customer's expense. The flow restrictive device will be removed at the expiration of the Level III water emergency, but may be removed earlier at the discretion of the administrator.

13.30.800 Interlocal agreements.

The administrator, with approval from the board, may enter into such agreements with local, state or federal agencies or jurisdictions as may be appropriate in administering the provisions of this title.

Chapter 13.40
LATECOMER UTILITY HOOKUPS

Sections:

13.40.010 Purpose.

13.40.020 Application.

13.40.030 Application requirements – Fee.

13.40.040 Contents of agreement.

13.40.050 Eligibility of applicants.

13.40.060 Rights and nonliability of county.

13.40.070 Latecomer agreement benefit area.

13.40.010 Purpose.

To allow for a process by which any person or entity who pays the cost to install utilities within a public right-of-way may recover a pro rata share of the costs of construction from other persons or entities (latecomer) who benefit from those utilities at a later date.

The authority to establish latecomer agreements and benefit areas shall be consistent with the powers and authorities provided by Chapters 35.91 and 36.94 RCW.

13.40.020 Application.

Any person or entity using private funds to install water or sewer utilities, improvements or appurtenances costing more than $10,000 within a public right-of-way may apply to the utility division for establishment of a latecomer agreement. The minimum expenditure level shall be adjusted annually effective on the first

day of the year through a percentage increase which shall not exceed the lesser of the percent change in the Consumer Price Index, All Cities, Urban Workers and Clerical Workers (CPI) as published by the U.S. Department of Labor for the 12 months ending the preceding September, or six percent.

13.40.030 Application requirements – Fee.

All applications for latecomer agreements shall be on forms approved and established by the administrator and shall be accompanied by a nonrefundable application fee to cover the utility system's expense in processing the application. This fee shall be as set forth in LCC Title 18.

13.40.040 Contents of agreement.

A latecomer agreement shall contain the following:

(1) A legal description of the properties.

(2) A legal description of the properties within the proposed latecomer agreement benefit area together with the name and address of the owners of each parcel as shown on the records of the Lewis County Assessor.

(3) Map of the proposed latecomer agreement benefit area showing the location of the utility system improvements, properties contributing to the original cost of the utility system, and parcels benefiting from the utility system improvements.

(4) Itemized cost of construction signed and dated by a professional engineer.

(5) Method of calculating latecomer payments and proposed allocation of the cost of construction to the individual parcels in the proposed latecomer agreement benefit area.

(6) Expiration date of latecomer agreement or conditions under which the latecomer agreement shall be terminated. The maximum term of the agreement shall not exceed 20 years according to RCW 35.91.020.

(7) Identification of the recipient(s) of any latecomer payments, time period of payment, and disposition of any unclaimed funds.

(8) Identification of ownership of utilities after installation and responsibility of maintenance and repair.

(9) Any provisions, covenants or restrictions deemed appropriate by the utility division.

Within 30 days of receipt of the application, the utility division will provide the applicant written notice of whether the application is complete and, if incomplete, what must be done for the application to be considered complete. The applicant will have no more than 30 days from the date of the written notice to respond and provide the information required to complete the application, or a written explanation of why he or she cannot provide the information within the designated time period and a date by which the requested information will be submitted. The administrator may grant the applicant an extension of no more than 60 days to submit the required information. If the applicant fails to meet this deadline, the utility division may, in its discretion, reject the application as untimely.

13.40.050 Eligibility of applicants.

Applicants for latecomer agreements must be in compliance with all county ordinances, rules and regulations in order to submit an application for a latecomer agreement and to have that application processed.

13.40.060 Rights and nonliability of county.

The utility division reserves the right to refuse to enter into any latecomer agreement or to reject any application. All applications for latecomer agreements shall include an express waiver of any and all lawsuits and causes of action against Lewis County, its employees and agents, arising out of the establishment, enforcement or failure to enforce latecomer agreements. Lewis County, its employees and agents shall not be responsible for locating any beneficiary or survivor entitled to benefits by or through latecomer agreement. Any collected funds still unclaimed by the applicant more than three years after the expiration of the agreement shall be returned to the parties that made those payments to the county. Any remaining undeliverable funds shall inure to the benefit of the appropriate utility or other fund designated by the board.

13.40.070 Latecomer agreement benefit area.

The procedure to establish a latecomer agreement benefit area shall be as follows:

(1) The utility division will formulate a latecomer agreement benefit area based upon a determination of which parcels did and did not contribute to the original cost of such utility system improvement and which parcels may subsequently benefit from connection to those utilities. Connection can be by tapping or discharging into the utilities and beneficial users shall include users connected to laterals or mains.

(2) The preliminary determination of area boundaries and potential assessments along with a description of the property owners' rights and options shall be given by registered mail to all affected property owners of record within the proposed benefit area. Owners of record shall be as shown on the records of the Lewis County Assessor. If any property owner requests a hearing in writing within 20 days of the utility division's mailing of the preliminary determination, a hearing shall be held before the Lewis County Hearing Examiner. Notice of the hearing will be given to all affected property owners at least 10 calendar days in advance of the hearing. The Lewis County Hearing Examiner's ruling is final.

(3) The latecomer agreement will be recorded at the applicant's expense at the Lewis County Auditor's office within 30 days of the final execution of the agreement. The agreement shall include notice of additional tap or connection charges as required in RCW 65.08.170. The applicant will pay for all recording fees and related expenses.

(4) Once recorded, the latecomer agreement shall be binding on property owners of record within the assessment area.

(5) The county will file a release with the auditor's office upon satisfaction of the latecomer's assessment.

Chapter 13.50
DESIGN GUIDELINES

Sections:

13.50.100 Design and construction standards.

13.50.110 Standard specifications.

13.50.120 Plan format.

13.50.130 Submittal procedure.

13.50.140 Inspection.

13.50.150 Testing.

13.50.160 Bonding.

13.50.170 Emergency work policy.

13.50.100 Design and construction standards.
Water and sewer design and construction standards as contained within adopted sewerage and water general plans shall serve as the design standards for the applicable utility systems.

13.50.110 Standard specifications.

Design detail, materials and construction shall be in conformance with the most recent edition of the standard specifications.

13.50.120 Plan format.

All utility construction or reconstruction plans shall be prepared by and bear the stamp of a qualified professional civil engineer licensed in the state of Washington. Final plans and profile drawings must be approved by the county engineer prior to the start of construction.

13.50.130 Submittal procedure.

Plans, profiles, details and general notes shall be submitted in accordance with submittal procedures provided by the utility division.

13.50.140 Inspection.

All new utility work performed in the utility service area shall comply with the provisions of this chapter. Any revisions to construction plans must be approved by the administrator before being implemented. The contractor or applicant shall notify the utility division in advance of any authorized work. Other requirements before commencement of work include but are not limited to the following: a preconstruction meeting or field review, permits, paid inspection fees, legal access, traffic control, erosion and sediment control, and performance surety.

13.50.150 Testing.

All testing shall be performed at the contractor's or applicant's expense.

13.50.160 Bonding.

Bonds or other allowable securities are required to guarantee the performance of and maintenance of new utility work by the contractor. The amount of the performance security shall be 125% (or such other percentage as currently used in Lewis County public works contracts) of the cost of the improvements. The cost of the improvement surety shall be determined by a professional engineer subject to the approval of the director. The amount of the maintenance surety bond shall be 25% of the cost of the constructed improvements, and shall be posted and maintained by the contractor for a period of one year from the date of acceptance by the director. The maintenance bond shall guarantee the constructed facilities against defects and failures in workmanship.

13.50.170 Emergency work policy.

Should the work of a contractor result in an emergency road or utility shutdown during normal working hours, the direct overtime costs of responding county personnel shall be billed to and payment enforced against the responsible party.

Chapter 13.60
WATER

Sections:

13.60.100	General
13.60.200	Design Standards
13.60.210	Water Main
13.60.220	Hydrants
13.60.230	Valves
13.60.240	Casing
13.60.250	Air and Vacuum Release Valve
13.60.260	Blowoff Assembly
13.60.270	Backflow Prevention
13.60.280	Service Connection
13.60.290	Water and Sewer Main Crossings
13.60.300	Irrigation
13.60.310	Staking
13.60.320	Trench Excavation

13.60.330	Thrust Blocking
13.60.340	Backfilling
13.60.350	Street Patching and Restoration
13.60.360	Hydrostatic Tests
13.60.370	Sterilization and Flushing
13.60.380	Pump Station

13.60.100 General

(1) Any extension of the water system must be approved by the administrator. All extensions must meet or exceed the requirements of DOH, the utility water system plan and the local fire protection authority. It is the applicant's responsibility to ensure that adequate water for both domestic use and fire protection is available. Proposed analyses, documents and plans must show how water will be supplied, and whether adequate water pressure and volume will be maintained in case of fire. In his or her discretion, the administrator may require an analysis of the system at the applicant's expense if the administrator determines that the system may be inadequate.

(2) Anyone desiring to extend or connect to the system must contact the utility and make application in accordance with LCC 13.30.100. After the completed application is submitted along with any other information required by the utility division and after project approval is obtained by the applicant from the local jurisdiction overseeing land development activities, the utility division will determine the costs to be paid by the applicant to connect to the water utility. Extensions and connections to the water utility outside of the water service area are permitted only when a demonstrated health risk exists and has been identified in writing by DOH and the applicable local health agency.

(3) All utility construction or reconstruction plans shall be prepared by and bear the stamp of a qualified professional civil engineer licensed in the state of Washington. Final plans and profile drawings must be approved by the county engineer prior to the start of construction. A surety for performance will be required to guarantee the completion or maintenance of the required construction. The amount shall be in an amount equal to 125% (or such other percentage as currently required in Lewis County public works contracts) of the cost of the improvements. The applicant is responsible to obtain all applicable permits and approvals before commencement of construction.

(4) Publicly owned utilities are not permitted on private property unless a benefit to the utility system can be demonstrated. Where public utilities are permitted to cross private lands, an easement must be granted to the utility. All easements must be prepared by a land surveyor licensed in the state of Washington capable to perform such work. Utility easements must be at least 20 feet in width. Easements shall be submitted in draft form for review and approval by the utility division prior to approval of construction plans. All costs to prepare and record the easement will be borne by the party requesting the extension or improvement.

(5) Before any water meters will be installed for service, the following requirements for water system improvements must be met: approval and acceptance of the improvements by the administrator; satisfactory testing and sterilization of the improvements; certification of completion of the improvements by a qualified professional civil engineer licensed by the state of Washington overseeing construction; submission of complete as-built plans; provision of adequate surety for

performance; proper certifications of all backflow assembly tests per LCC 13.30.150; granting and recording of proper public right-of-way; payment of all applicable fees; written final project approval from the local jurisdiction overseeing land development activities; and written approval by the local building authority.

(6) The Lewis County Engineer is authorized to amend the Standard Plans in this chapter as deemed necessary and appropriate.

13.60.200 Design Standards

(1) Water and sewer design and construction standards apply in the following order of priority: as contained within current, adopted sewerage and water general plans; Chapter 13.60 LCC; and in the most recent edition of the standard specifications. In the event of a conflict, the administrator shall determine the appropriate design and construction standards to use.

(2) The pipe arrangement of the improvements shall provide for future continuation, extend through the extremes of the property for loop closures and create a looping of the existing system.

(3) The general notes that follow must be included on all plans pertaining to water systems.

GENERAL NOTES (Water Main Installation)

1. All workmanship and material shall be in accordance with Lewis County standards and the most current copy of the State of Washington Specifications for Road, Bridge and Municipal Construction, as published by the Washington State Department of Transportation, American Water Works Association (AWWA) Standards and Washington State Department of Health (DOH) regulations.
2. A preconstruction meeting will be held with the contractor, applicant's engineer, a utility inspector, a representative of the utility division, a representative of the Engineering Division of the Public Works department, and the affected parties before the start of construction.
3. All water lines 8-inches in diameter and larger shall be ductile iron, thickness class 52, rated working pressure of 350 psi conforming to AWWA C151, cement mortar lined conforming to AWWA C104 and push on joints conforming to AWWA C111. Water mains of 4-inches and 6-inches in diameter shall be PVC C-900 class 200. No solvent weld joint pipe is allowed.
4. Fittings shall be ductile iron compact fittings conforming to AWWA C153, C110 or C111. All fittings will be cement mortar lined conforming to AWWA C104. Plain end fittings will be ductile iron if mechanical joint retainer glands are installed on the plain ends. All fittings will be connected by flanges or mechanical joints. If required by the administrator, megalug retainer glands and pipe restraint systems shall be required. These restraint systems shall be as manufactured by Romac Industries, EBAA Iron Inc. or such other equivalent restraint systems as specifically and expressly approved in writing by the Lewis County Engineer.
5. Gate valves will be resilient wedge, NRS (non-rising stem) with O-ring seals. Valve ends will be mechanical joint or ANSI flanges. Valves will conform to AWWA 509-80. Valves shall be Mueller, M&H, Kennedy or Clow. Existing valves and all valves installed directly to and connected to a portion of the active water system are to be operated by utility division personnel only.
6. The contractor will timely provide approved traffic control plans in accordance with the "Manual on Uniform Traffic Control Devices" (MUTCD). Traffic control plans must be approved by the agency administering the affected right of ways.

7. The contractor will keep copies of all approved permits and approvals for water main construction on site.
8. All water mains will be staked for grades and alignment by the design engineer or a licensed land surveyor. All vertical control shall be established to be consistent with the datum used by the water utility. Staking will be maintained throughout construction.
9. All water system connections serving buildings or properties with domestic potable water, fire sprinkler or irrigation systems must comply with the minimum backflow prevention requirements established by DOH and the Cross-connection Control Program for the water utility.
10. The contractor must call Utilities Underground Location Center at 1-800-424-5555 a minimum of two business days before any excavations.
11. All pipes and services must be installed with continuous tracer tape and toning wire. Tracer tape will be placed 12 to 18 inches under the proposed finished subgrade. The marker will be of plastic, non-biodegradable, metal core or backing marked "WATER" that can be detected by a standard metal detector. Tape will be Terra Tape "D" or approved equal. Toning or tracing wire will be UL listed, type UF, 12-gauge solid coated copper wire. The wire shall be taped to the top of the pipe to prevent movement during backfilling, and laid loose enough to prevent stretching and damage before brought up and tied off at the valve operating nut, valve box or meter box. If the operating nut is not easily accessible from the ground surface, the wire will be tied off at the valve box so that the wire is easily accessible from the ground surface. Two (2) feet of slack will be provided to allow for connection to the locator.
12. A minimum cover of 30 inches and a maximum cover of 36 inches over the pipe shall be maintained at all times.
13. All steps of the testing, chlorination and sampling processes must be witnessed by the utility inspector.
14. All pipe and appurtenances shall be hydrostatically tested at 200 psi (min.) for two hours. A pressure drop greater than 5 psig shall constitute a failure and the pipe shall be retested. The contractor's pressure gage shall be certified for accuracy from a certified testing lab, a maximum of 6 months prior to the start date of construction.
15. Chlorination by means of tablets or powders (dry calcium hydrochlorite) placed in each length of pipe during installation is prohibited.
16. Where the water line crosses a sanitary sewer, the water line shall be above the sewer line with a separation of at least 18 inches between the invert of the water line and the crown of the sewer pipe. If these criteria cannot be met, then the sewer pipe shall be cased within ductile iron pipe for a distance of 10 ft on both sides of the water line.
17. All "long side services" shall be encased in 160 psi pipe and per the following schedule when crossing the right-of-way.

¾" Service	needs 1.5" diameter casing.
1" Service	needs 2" diameter casing.
1.5" Service	needs 3" diameter casing.
2" Service	needs 3" diameter casing.

18. The utility must be notified five (5) working days prior to scheduling a water system shutdown. Utility personnel will perform all water system shutdowns. When connections require field verification, the contractor will expose the connection points and have the fittings verified by the utility three (3) working days before the anticipated shutdown date. Shutdowns will not be permitted on Fridays, weekends or holidays without advance written approval from the administrator.

19. When connecting to an existing water line where a new valve is not to be installed, the existing valve must be pressure tested to these standards by the contractor prior to connection. If an existing valve fails the test, the contractor will make the necessary additional provisions to test the new main prior to connecting to the existing system or the contractor will install a new valve. New mains will not be connected to the existing system until all required tests have passed.

13.60.210 Water Main

(1) Water mains shall be sized to provide adequate domestic and fire flow at the required residual pressure. Fire flow requirements will be determined by the local fire protection authority. Notwithstanding the foregoing, the fire flow shall be no less than 750 gpm at 20 psi residual pressure or the applicable minimum fire flows in WAC 246-293-640.

(2) The minimum water main size will be 6-inches in diameter where looped and 8-inches in diameter to the last fire hydrant where not looped. Larger sized mains may be required as identified by the water system plan or if determined necessary by the administrator to meet fire protection, domestic requirements or future service needs.

(3) All mains that may be extended or looped must end with an approved, flanged gate valve and blind flange, thrust block and blowoff assembly.

(4) All water lines 8-inches in diameter and larger shall be ductile iron, thickness class 52, rated working pressure of 350 psi conforming to AWWA C151 and cement mortar lined conforming to AWWA C104. All pipes will be joined using non-restrained joints that are rubber gasket, push-on type or mechanical joint, conforming to AWWA C111. Water mains shall be PVC C-900 class 200 for 4-inch and 6-inch diameter mains. No solvent weld joint pipe is allowed.

(5) All fittings shall be ductile iron compact fittings conforming to AWWA C153, C110 or C111. All fittings will be cement mortar lined conforming to AWWA C104. Plain end fittings will be ductile iron if mechanical joint retainer glands are installed on the plain ends. All fittings will be connected by flanges or mechanical joints. If directed by the administrator, mechanical joint restraint retainer glands and pipe restraint system shall be required. These restraint systems shall be as manufactured by Romac Industries, MEGALUG by EBAA Iron Inc. or such other equivalent restraint systems as specifically and expressly approved in writing by the Lewis County Engineer.

(6) All pipes and services must be installed with continuous tracer tape and toning wire. Tracer tape will be placed 12 to 18 inches under the proposed finished subgrade. The marker will be of plastic, non-biodegradable, metal core or backing marked "WATER" that can be detected by a standard metal detector. Tape will be Terra Tape "D" or approved equal. Toning or tracing wire will be UL listed, type UF, 12-gauge solid coated copper wire. The wire shall be taped to the top of the pipe to prevent movement during backfilling, and laid loose enough to prevent stretching and damage before brought up and tied off at the valve operating nut, valve box or meter box. If the operating nut is not easily accessible from the ground surface, the wire will be tied off at the valve box so that the wire is easily accessible from the ground surface. Two (2) feet of slack will be provided to allow for connection to the locator.

(7) The applicant's engineer will be responsible for determining the scope of work for connection to existing water mains. A minimum of five (5) working days' advance written notice is required to schedule shutdowns. Shutdowns cannot be scheduled until an application for utility service has been

approved and all applicable fees have been paid in full. The utility division will be consulted about required fittings and couplings. It is the contractor's responsibility to verify the location and depth of the existing main; obtain required fittings; and to furnish all materials, equipment and labor to make the connections to the existing main. The tapping of an existing water main shall be done in the presence of a utility inspector.

13.60.220 Hydrants

(1) The lead from the service main to the fire hydrant will be ductile iron cement mortar lined class 52, no less than 6 inches in diameter. A gate valve will be installed a minimum of three (3) feet from the hydrant unless otherwise approved in writing by the administrator.

(2) Fire hydrants shall have two 2.5-inch hose connections, one 4.5-inch pumper connection, a removable Storz one-quarter turn adapter and blind cap attached to the pumper connection. The Storz adapter will include a cap. All threads shall be National Standard Thread. The hydrant will have a positive and automatic barrel drain, breakoff flange on the barrel, breakoff coupling for the stem and of the "safety" or breakaway style.

Hydrants shall be manufactured by Clow Coporation (Medallion), Mueller Centurion, M&H Reliant Style 929, or equal approved in writing by the Lewis County Engineer. All hydrants will be bagged and the connecting gate valves will remain closed until the system is tested and approved. Hydrants will be painted with high-grade enamel after installation in the color specified by the local fire authority agency.

(3) The utility division will work with the local fire authority agency to determine hydrant spacing and placement to provide accessibility at all times for fire protection and maintenance. The utility will maintain hydrants that are owned by the utility system. Unless otherwise required by the local fire authority agency, the following guidelines shall apply for hydrants that are owned by the utility division:

- At least one hydrant will be installed at all intersections.
- Maximum hydrant spacing of 500 ft will be required for residential areas.
- Maximum hydrant spacing of 300 ft will be required for non-residential areas.
- The spacing distance for hydrants will be measured along the frontage and accessible side streets. When determining the sufficiency of existing hydrants, hydrants with flows that do not meet the requirements of LCC 13.60.210(1) will not be considered.

(4) The utility division may require hydrants to be protected by two or more posts, 4-inches in diameter by 5 ft in height, of reinforced concrete or steel; or other protection as specified in writing by the administrator.

(5) Fire hydrants that will belong to the utility must be constructed and tested prior to acceptance by the utility division.

13.60.230 Valves

(1) General. All valves and fittings will be ductile iron with ANSI flanges or mechanical joint ends. All existing valves are to be operated by utility personnel only.

(2) Valves shall be installed in the distribution system at sufficient intervals to facilitate system repair and maintenance, but in no case less than one valve every 600 ft. Generally, there will be two (2) valves on each tee and three (3) valves on each cross. Specific requirements for valve spacing will be made at the plan review stage.

(3) Gate valves will be used on all 2-inch to 12-inch diameter water lines. The design, materials and workmanship of all gate valves shall conform to the most recent AWWA C509-87. Gate valves will be resilient wedge non-rising stem (NRS) with two (2) internal O-ring seals. Gate valves shall be manufactured by Mueller, M&H, Kennedy or Clow.

(4) Butterfly valves will be used on lines 14 inches in diameter and larger. Butterfly valves will conform to AWWA C504-87, class 150B with cast iron short body and O-ring stem seals. Butterfly valves shall be manufactured by Mueller, Pratt Groundhog, Kennedy or American Darling.

(5) All valves shall have a standard Olympic Foundry 910 or 940 ductile iron water valve box, or equal approved in writing by the Lewis County Engineer. The valve box will be set to grade with a 6-inch ASTM 3034 SDR 35 PVC riser from valve to approximately six (6) inches from the valve box top. If valves are not set in a paved area, a three (3) foot by three (3) foot concrete pad four (4) inches thick will be set around each valve box at finished grade. If the valve box is positioned on the road shoulder, the ditch and shoulder shall be graded before placing the asphalt or concrete pad. All valve box components shall be H-20 rated, ductile iron, anti-kickout lids, and marked with "WATER" or "W" on the lids.

13.60.240 Casing

Steel casing pipe shall be schedule 20 steel or equal approved in writing by the administrator. Casing pipe and pipe spacers will be sized for the pipe being installed with a minimum of three spacers per section of pipe. The casing pipe shall be sand-packed and sealed after the water pipe is installed according to the spacer manufacturer's recommendations.

13.60.250 Air and Vacuum Release Valve

Combination air release and vacuum valves (ARV) shall be APCO 140 series, Cla-Val series 36, Val-Matic or Crispin with stainless steel internal components and hardware. Installation shall be set at the high point of the line when required. Where possible, pipes are to be graded to prevent the need for an ARV. ARVs may not be required when services are in the area but the final determination will be made by the administrator.

13.60.260 Blowoff Assembly

If a fire hydrant is not located at the end of a dead end main, a blowoff assembly is required. On water mains tbat may be extended in the future, the valve that operates the blowoff assembly will be the same size as the main and provided with a concrete thrust block. The pressure rating for blowoff assemblies shall be two hundred (200) psi. Adequate drainage must be available for use of the assembly under operating conditions.

13.60.270 Backflow Prevention

(1) All water service connections to serve buildings with domestic potable water, fire suppression, private well, on-site irrigation or other potential backflow hazards shall comply with the backflow requirements established by DOH, WAC 246-290 and the utility.

(2) All backflow prevention assemblies installed must be of a type and model preapproved in writing by DOH or the utility division, and constructed in accordance with the Uniform Plumbing Code (UPC). The utility division may require additional premise protection when health hazards are known to exist.

(3) All assemblies will be installed behind the utility's metering device, and within six (6) feet of the meter box or before any other use connection in order to protect the water distribution system.

(4) All installed assemblies must be inspected and approved by a state certified Backflow Assembly Tester (BAT). The property owner shall submit the results of the initial and thereafter annual tests and inspections of all backflow prevention assemblies by a certified BAT to the utility division. All assemblies not passing a test must be repaired immediately.

(5) All costs associated with purchase, construction, inspections, testing, replacement, maintenance, parts and repairs of a backflow prevention assembly are the responsibility of the property owner or customer.

(6) Failure on the part of the water customer to correct all cross connections in accordance with Title 13 of the LCC, to test as required, or to bypass an assembly or air gap is sufficient cause for the immediate discontinuance of public water service to the premises.

13.60.280 Service Connection

(1) When water service is desired for a parcel fronting an existing main and within the service area for capacity, but not served by an existing meter setter, an application for utility service must be completed and submitted to the utility division. Upon approval of the application and payment of all applicable fees, the utility division will tap the main and install the meter setter, box and meter.

(2) The contractor shall give the department a minimum of five (5) working days' advance written notice of any planned connection to an existing pipeline. This includes all cut-ins and live taps. Notice is required so disruptions to existing services can be scheduled. The utility division will provide notice to affected customers 24 hours in advance of the water service interruption. The contractor shall make every effort to schedule water main construction with a minimum interruption of service. In all situations, the utility division shall determine scheduling of water main shutdowns.

(3) All water services shall end within public right-of-way or easements. Shutoff valves shall be located behind the service meter box and constructed with a separate box on the edge or outside of the public right-of-way. All services, meter setters, shutoff valves and meter boxes shall be installed by the contractor. The utility division will install the meters.

(4) Service lines will be 1-inch, 200 psi minimum working pressure, SDR 7 polyethylene pipe such as DriscoPlex 5100 Ultra-Line or equivalent product approved in writing by the Lewis County Engineer. Service lines shall be installed a minimum of 22.5° off the main. Tracer wire shall be 12-gauge copper with neoprene coating. Tracer wire shall be wrapped around the pipe from the main tap to the meter box with an exposed minimum length of 6 inches in the meter box.

Service saddles shall be ductile iron with double stainless steel straps as manufactured by Romac or equivalent product approved in writing by the Lewis County Engineer. All clamps shall have a rubber gasket.

Corporation stops shall be all U.S. brass with counterclockwise (cc) threads conforming to AWWA C800 unless using a service saddle. If using a service saddle, threads shall be Iron Pipe Threads (I.P.T). Corporation stops shall be manufactured by Ford or Mueller. Stainless steel inserts are required for all compression grip fittings.

Meter setters shall be no-lead, copper yoke types with ball valve, check valve and double purpose couplings as manufactured by Ford or Mueller.

Meter boxes shall be H20 rated with minimum exterior dimensions of 14-inch x 20-inch x 10-inch deep and ductile iron flip reader lids such as Fogtite no. 1, Fogtite B-9 or equivalent product approved in writing by the Lewis County Engineer.

(5) Master meters or metering of service to more than one building shall be approved by the administrator, the local jurisdiction overseeing land development activities and/or local health department. An approved backflow prevention system must be installed in conjunction with any master meter in accordance with WAC 246-290-490 and LCC 13.30.150.

13.60.290 Water and Sewer Main Crossings

The contractor will maintain a minimum of 18 inches of vertical separation between sanitary sewers and water mains with the water main being at the highest elevation. If the minimum vertical separation cannot be met, then the standards for water-sewer separation in the Department of Ecology's Criteria for Sewage Works Design shall apply. The longest standard length of water pipe will be installed so that the joints will be equidistant from any sewer crossing. In cases where minimum separation cannot be maintained, it will be necessary to encase the sewer pipe in ductile iron pipe or concrete. No concrete will be installed unless directed by the administrator.

13.60.300 Irrigation

All irrigation systems shall be installed with a backflow prevention assembly approved in writing by DOH and the administrator. Irrigation sprinklers shall be situated so as to not wet any public street and sidewalk.

13.60.310 Staking

All surveying and staking will be performed by an engineering or surveying firm licensed by the State of Washington and capable of performing such work. A preconstruction meeting will be held with the county and the staking will be inspected by the county prior to construction. Staking shall be maintained throughout construction.

The minimum staking of water lines shall be as follows:

1. Stake centerline alignment every 25 ft (50 ft in tangent sections) with cuts and fills to the bottom of the trench maintaining the minimum required depth of cover over the pipe.
2. Stake locations of all fire hydrants, hydrant flange elevations, tees, water meters, meter setters and other fixtures within the cut or fill to finished grade.

13.60.320 Trench Excavation

(1) Clearing and grubbing where required shall be performed within the public right-of-way or easement as permitted by the local jurisdiction. All debris resulting from clearing and grubbing must be disposed of by the owner or contractor in accordance with the terms of the applicable permits.

(2) Trenches shall be excavated to the line and depth designated by the water utility to provide a minimum of 30 inches of cover over the water pipe. Except for unusual circumstances where approved by the water utility, the trench sides shall be excavated vertically and the trench width shall be excavated only to such widths necessary for adequate working space as allowed by the governing agency. The trench shall be kept free from water until pipe assembly is complete. Surface water will be diverted so as to not enter the trench. The contractor shall maintain sufficient pumping equipment on the job to ensure that these provisions are carried out. Pipe placed in the trench will be sealed with a watertight plug at the end of each day. More frequent use of a watertight plug may be as required by the water utility.

(3) The contractor shall perform all excavation of every description and of whatever substance encountered including boulders, rocks, roots and other obstructions. All material will be entirely removed or cut out to the width of the trench and to a depth six (6) inches below water main grade. Where materials are removed from below water main grade, the trench shall be backfilled to grade with material satisfactory to the county and thoroughly compacted.

(4) Trenching and shoring operations shall not proceed more than 100 ft in advance of pipe laying with approval of the water utility and shall be in conformance with the Washington Industrial Safety and Health Administration (WISHA) and Office of Safety and Health Administration (OSHA) safety standards. The contractor shall continuously maintain the presence of a "competent person" as defined by the Washington State Department of Labor and Industries (L&I) when any trench excavation and backfill work is being done at the project site.

(5) The bottom of the trench shall be finished to grade with hand tools in such a manner that the pipe will have a bearing along the entire length of the barrel. The bell holds shall be excavated with hand tools to sufficient size to make up the joint.

13.60.330 Thrust Blocking

The location of all thrust blocking will be shown on plans. The concrete blocking mix shall be Class 3000 cast against undisturbed earth. A plastic barrier will be placed between all thrust blocks and fittings. MEGALUG restrainers, Romac retainers or restraining rods shall be used in lieu or with thrust blocks.

13.60.340 Backfilling

Backfilling will not commence until the pipe installation has been inspected and approved by a water utility inspector. Backfilling and surface restoration will follow construction of the pipe so that not more than 100 ft is left exposed during construction hours without approval of the utility division.

Selected bedding material conforming to WSDOT Standard Specifications will be placed and compacted around and under the water mains by hand tools to a height of six inches above the top of the main. The remaining backfill shall be compacted to 95% of the maximum density in travel, paved and shoulder areas, and 85% in unpaved, non-travel areas.

Backfill and compaction shall be completed to the satisfaction of the jurisdiction over the public right of way. If suitable backfill material is not available from the trenching operations, select bedding or gravel

base conforming to WSDOT Standard Specifications may be used. At the conclusion of each day the trench shall be totally backfilled or steel plated so that no open excavation is left overnight.

13.60.350 Street Patching and Restoration

Street patching and restoration shall be completed to the satisfaction of the local government with jurisdiction over the roadways.

13.60.360 Hydrostatic Tests

(1) Prior to the acceptance of work, the contractor shall conduct a hydrostatic pressure test on the installation. All labor, water, pumps, gauges, plugs, saddles, corporation stops, hoses, chemicals, measuring equipment and incidentals necessary to perform the test will be furnished and operated by the contractor. The contractor's pressure gauge shall be certified for accuracy from a certified testing lab, a maximum of six (6) months prior to the first start date of construction. The contractor will pay for all water needed for testing at the current rates charged by the utility division. Hydrostatic and bacteriological tests will be conducted after all connections along the section to be tested have been made, underground utilities are installed and the roadway section is constructed to subgrade.

(2) Only utility division authorized personnel shall operate isolation valves. All tests will be made with the hydrant auxiliary gate valves open and pressure against the hydrant valve. After the test has been completed, each gate valve will be tested individually by closing each in turn and relieving the pressure beyond. This test will be acceptable if there is no immediate loss of pressure on the gauge when the pressure comes against the valve being tested. The contractor will verify that the pressure across the valve does not exceed the rated working pressure of the valve.

(3) The section of main to be tested shall be filled with water at a velocity no greater than 1 ft/sec and allowed to stand under pressure for a sufficient length of time to allow air to escape and the pipe lining to absorb water.

(4) The utility division shall be present to witness the test after all air in the main has been released. The test will be accomplished by pumping the main up to 150 psi above the normal operating pressure but not less than 200 psi. After reaching the test pressure, the pump will be stopped for 15 minutes and then the pressure will be brought back up to the test pressure again. Test pressure shall be maintained for two hours. A pressure drop greater than 5 psig shall constitute a failure and the system shall be retested.

(5) Defective material or workmanship discovered during a hydrostatic field test will be replaced by the contractor at no expense to the utility division. Hydrostatic tests will be made by the contractor until a satisfactory test is obtained.

13.60.370 Sterilization and Flushing

(1) Sterilization of water mains shall be accomplished by the contractor in accordance with the requirements of DOH and current AWWA standards, and in a manner satisfactory to the utility division.

(2) The contractor is responsible for all costs in this section, retesting and associated work to comply with sterilization and flushing.

(3) Chlorination by means of tablets or powders such as dry calcium hypochlorite placed in each length of pipe during installation is prohibited.

(4) The contractor shall prepare a plan for disposal of treated water prior to performing any disinfection. At no time shall treated water from a new main be disposed directly into any water course or natural drainage channel. Sodium ascorbate or other approved chemical shall be used as the neutralizing agent if dechlorination is used. Sodium thiosulfate shall be not be used. Written permission from the sewer agency shall be obtained before disposal to the sanitary sewer is allowed.

(5) Following a successful hydrostatic test, the water main not connected to the existing system shall be relieved of excess pressure and the main left full of the proper chlorine concentration. The line shall be left undisturbed for at least 24 hours but not more than 48 hours before starting the flushing process. Flush thoroughly and as soon as possible after the 24-hour period to minimize prolonged exposure of the pipe to high concentrations of chlorine. The contractor shall flush until the chlorine level in the water leaving the new main is no higher than the distribution system or that level acceptable for domestic use.

(6) The contractor shall take water samples in the presence of utility division inspector at least 24 hours after flushing and disinfecting. Should the initial chlorine treatment result in an unsatisfactory bacteriological test, the procedure must be repeated by the contractor until satisfactory results are obtained.

13.60.380 Pump Station

When a pump station is required to provide the necessary flows for a new development, the applicant shall construct and bear all costs of the pump station, provide training and instructional manuals to the utility division, and associated documentation to the utility division to help maintain the pump station. The pump station shall be designed and certified by a professional engineer licensed by the state of Washington in civil engineering.

Chapter 13.70
SEWER

(Reserved)

Chapter 13.80
WATER AND SEWER SERVICE CONNECTIONS

Sections:

13.80.100 Conditions of utility service.

13.80.200 Costs of meter installation.

13.80.300 Customer deposit.

13.80.400 Customer charges.

13.80.410 Turn-on and shut-off charges.

13.80.420 Temporary shut-off charges.

13.80.430 Service call charges.

13.80.440 Meter testing and service meter charges.

13.80.450 Water service user charges.

13.80.455 Use of fire protection facilities for other purposes charges.

13.80.460 Charges for low-income senior citizen customers.

13.80.470 Delinquent charges.

13.80.480 Overhead charges.

13.80.500 Method of billing and payment.

13.80.100 Conditions of utility service.

(1) Accounts shall be in the name of the property owner. Rental tenants with accounts in their own names may retain their existing accounts in their names until their accounts are closed. The property owner may request to have duplicate bills mailed to a tenant, lessee or agent; however, this shall not relieve the property owner from liability for incurred charges. This request shall be made on the application form provided by the utility division.

(2) Ownership of Water Lines.

(a) The utility division shall install, own and maintain water service lines from the main to and including the meter. Water service lines from the main to and including the meter box may be installed by the customer's contractor, subject to payment of fees, inspection and written approval by the water utility.

(b) The meter wherever feasible shall be placed within the public right-of-way as to be easily associated with the intended building, and within two feet of the edge of existing or proposed road surfacing, within two feet of the property line nearest the customer's premises, or as approved in writing by the administrator if there are unusual or conflicting conditions. The utility will record the location of the meter.

(c) For each residential service connection, the utility will install a one-inch corporation stop, service piping from the corporation stop to the service meter, a three-fourths-inch-by-five-eighths-inch water meter, a meter stop, and meter box; and record the location. The connection to the utility's water main will extend at right angles from the main to the property line. One inch 200 psi or greater pipe shall be placed two feet (minimum) below grade, and three feet (minimum) below grade at the street or alley crossings.

(d) Customer lines from the meter to the premises shall be installed, owned and maintained by the customer.

(3) Individual Service Required. Each service line or sewer lateral shall be connected to only one residence, building, and customer as practicable; and the parcel so supplied shall not supply water to

any other properties. Property owners of multifamily buildings or multiple dwellings may use a single connection with the written approval of the administrator.

(4) Installation on Private Property. Service lines and meters shall not be installed on private property unless the utility division finds that service cannot be practically provided, in which case an easement shall be granted to the water utility from the property owner.

(5) Charge for Installation of Larger Service Line or Relocation of Existing Service Line. The customer will complete an application form and pay the fees and applicable costs to install a larger service line and meter, or to relocate an existing service line.

(6) Backflow Prevention Requirements. All water service connections serving buildings or properties with domestic potable water, fire sprinkler or irrigation systems will comply with the minimum backflow prevention requirements established by DOH. Backflow assembly testers (BAT) shall supply the water utility with documentation indicating that their testing equipment has a current certificate of accuracy and with a current DOH BAT certification card. The property owner shall be responsible for all testing and backflow prevention requirements in the CCCP.

(7) Transferring Customer Line. Whenever a service line is realigned by the utility division, the customer shall immediately upon notice and at customer's expense transfer the customer line to the newly positioned service line.

(8) Owner Is Responsible for Installation and Maintenance of Customer Lines and Sewer Laterals.

(a) Customer lines from the water service meter to the premises and the sewer lateral from the premises to the public sewer shall be installed, owned and maintained by the customer. Customer lines shall be constructed to avoid concrete surfaces, buildings and any obstructions, and with no joints beneath pavement areas.

(b) The customer shall be responsible for obtaining all building, right-of-way permits and use permits required for work on the premises and within the public rights-of-way.

(c) The utility division may reimburse the customer for the cost of the repair of that portion of the sewer lateral within the dedicated public right-of-way if damage to the sewer lateral was proved to be caused by the utility. Damages from natural disasters, root intrusion, and acts and omissions of the customer are excluded from claims to the utility division. The amount of the reimbursement from the utility division shall not exceed the cost for installation of a new sewer lateral from the main sewer to the property line. Claims must be made on approved forms by the utility division. The administrator shall investigate all submitted claims, and determine the validity and amount of reimbursement in writing.

(9) Specifications for Customer Lines and Sewer Laterals.

(a) All customer lines shall have a two (2) feet minimum cover depth above the line, and equipped with an approved backflow prevention device or check valve, and a readily accessible ball or wheel valve between the meter box and the building so that the customer may at any time shut off water to the premises. Customer lines larger than one-inch in diameter shall be equipped with an accessible gate valve complete with hand wheel, check valve and utility box rated HS-20 to withstand vehicle traffic or as approved by the utility division; and may require a backflow prevention assembly and compliance with LCC 13.30.150. Water service shall not start until these appurtenances are installed and approved by the local building authority.

(b) All sewer laterals shall be installed in accordance with the utility division's sewerage general plan. Each sewer lateral shall be provided with a cleanout to within six (6) inches of finished grade at the property line or not to exceed 30 feet from the property line with an easement granted to the utility from the property owner.

(10) Installation of Service Lines and Sewer Laterals. All installations within the public rights-of-way including obtainment of permits and approvals for the work shall be performed by a state licensed contractor in good standing per Section 1-02 Standard Specification or as approved by the administrator in writing. No service lines crossing paved streets shall be surface trenched, nor shall the paved road surface be damaged in any way.

(11) Liability for Leakage or Stoppage. The utility division is not responsible for any partial or complete stoppage, leakage or damage to any customer's pipelines, fixtures, sewer laterals, plumbing, premises and contents.

(12) Termination of Service. Sufficient causes to terminate service are: delinquency and nonpayment of water service; finding by the utility division of actual or potential connections, actions or non-compliance with utility requirements that could contaminate the water system by backflow or impact the utility's ability to provide safe and reliable drinking water; and finding by the appropriate authorities of an unsafe, dangerous to human life or of a building unfit for human habitation. Water service shall be restored when the property owner has fully paid the delinquent utility bill and any associated fees, and secured a release or clearance from said authorities.

(13) Authority to Disconnect. The utility division shall have the right to shut off the supply of water whenever it is necessary to make repairs, improvements, enforce rules, or for any operating reason. Reasonable notices will be given to customers, except in emergency shut-off situations.

(14) Dangerous and Defective Customer Equipment. Water for steam boilers and other industrial use involving possible danger to the system will not be furnished by direct pressure from the water mains. The utility division has the right to refuse water service or to discontinue water service without notice to any customer upon finding any apparatus and operations which will be detrimental to the water system. Standpipes, fire hydrants, gate valves or other equipment that cause water hammer or any danger to the water system shall be immediately repaired or removed upon notice from the utility division.

(15) Liability for Damage. The customer shall be responsible for and pay for any damages to the water system and water service line appurtenances owned by the utility division.

(16) Tampering with Equipment and Fire Hydrants. It shall be a violation of this title for any person other than authorized personnel of the utility division or the fire department to operate, alter, change, remove, disconnect, connect with, interfere, or attempt to interfere in any manner with any part of the water system owned by the utility division including fire hydrants.

(17) Unauthorized Use of Water. It shall be a violation of this title for any person making and breaking any connection to the water system to obtain water without paying the just charges. The utility division shall have the authority to shut off water to the premises, and to collect all charges due for water properly and improperly obtained and all incurred costs by the utility division. If the improper connection is on public right-of-way, the utility division will make the necessary changes, removals or repairs. If the improper connection is on private property, the property owner shall do the directed work immediately upon demand.

(18) Utility Access. The utility division shall have access to water service meters, valves, hydrants and other facilities owned by the utility division at all times. A three-foot clear radius from the utility structure must be maintained at all meter and valve boxes, vaults and above ground structures. Access to fire hydrants shall never be blocked. Obstruction of the utility division's structures is not permitted, and the utility division shall disconnect service to the premises if the customer does not remove the obstruction.

13.80.200 Costs of meter installation.

(1) The costs of installation to the utility system shall be based on the service and/or meter sizes.

(2) These costs shall include installation where open cutting or conventional boring methods and direct burial of the service lines are not permitted. Where special conditions exist or special approvals and permit fees are required, all costs and fees associated with such restrictions, and any special conditions, shall be added to the above installation costs.

(3) Where it is necessary to open cut paved roadway, cross under a sidewalk, or an improved area between the curb and the property line to install the service, the customer shall also be charged the costs necessary to restore the disturbed roadway, sidewalk, or improved area to its original condition or better condition. Such costs for restoration shall include time and materials plus overhead charges.

(4) For water service 1-inch and larger, the costs of the installation will be based on the actual cost of the meter, materials, labor, and equipment, plus overhead charges. The customer requesting a service larger than 1- inch shall pay a deposit in an amount of 125% or the current percentage used in county public works contracts of the administrator's estimate of the cost for construction work and the work shall thereafter be billed on the basis of actual cost difference from the estimated cost, including overhead.

13.80.300 Customer deposit.

(1) A deposit shall be paid by each water customer at the time of application for a service connection or a service account. The deposit paid by each customer shall be refunded to the person paying the deposit when the account is closed, providing there is no unpaid balance in the account. Lewis County may apply all or part of the deposit to any unpaid balance and charges.

(2) Any deposit remainder unable to be refunded to the customer when the account is closed shall be held by Lewis County for a period of one year from the date of account closure. If demand is not made upon Lewis County for refund of the deposit by the customer within the period of one year after the account is closed out, the amount of the deposit remaining shall be deemed to be unclaimed property and shall pass to the State of Washington Department of Revenue, in accordance with the mandates of the Uniform Unclaimed Property Act of 1983, as it now exists or is hereafter amended.

13.80.400 Customer charges.

Customers receiving utility services shall be required to pay all charges, fees, deposits and other costs prior to any physical connection or installation of facilities. No service shall be delivered or provided until all such charges are paid. Such charges shall be nonrefundable.

13.80.410 Meter-on charges.

There shall be a charge for unlocking and turning on the water service meter during normal working hours and during non-normal working hours.

Water customers shall notify the utility division at least two working days before the date they desire water to be shut off or turned on. A meter fee will be charged when the water is turned back on.

Customers that shut off their own valves on their customer service lines will still incur water service usage charges.

13.80.420 Short Term shutoff charges.

Residential water customers desiring their water be shut off for a period up to one year may apply for a short term shutoff charge. The customer pays 75% of the base charges from the month of shutoff to the month of resumed service, and a meter-on charge upon resuming water service. Short term shutoff charges shall be determined according to LCC 13.80.450 and expire after one year from the month of shutoff. Customers will need to reapply.

13.80.430 Service call charges.

(1) Service calls involving extraordinary and unusual time demands shall be charged to the customer requesting the service call at the cost of labor of each employee involved, including travel time, for service calls made during normal working hours of the utility division. The minimum charge for such service call during normal working hours shall be applied.

(2) Service calls made on Saturdays, Sundays, holidays, or outside of the normal working hours of the utility division, Monday through Friday, shall be charged to the customer requesting the service call at the cost of labor of each employee involved, including travel time, mileage and costs at the overhead rate charge. The minimum charge for such service call during non-normal working hours shall be applied.

13.80.440 Meter testing and service meter charges.

(1) Any person requesting a test of any water meter shall, at the time of request, deposit with Lewis County the amount to be charged for such test.

(2) Meters two inches and smaller in size shall be tested off-site. Meters larger than two inches shall be tested in the field. After the deposit has been made and the test has been scheduled, the customer shall be notified of the date and time that the meter test is scheduled to take place. The customer shall have the option of being present when such test is made. In the event the test discloses an error of more than three percent of water consumed in favor of the utility division, the deposit and any service charges shall be refunded to the customer, the meter shall be corrected or an accurate meter shall be installed, and the customer's account shall be credited with the amount charged for the excess consumption on the three previous readings. When the test discloses an error of three percent or less, the amount deposited shall be retained by the utility division to cover the costs of such test.

(3) There shall be a service meter charge for customer requested meters. This charge shall apply if the customer requests a replacement meter or a new meter for new service connection. This charge shall not apply if the utility division determines that the existing service meter is defective.

(4) Any person requesting service on premises with no service meter shall pay the service meter charge.

13.80.450 Water service user charges.

Every water customer shall pay a base charge and usage charge per billing period as approved by resolution for the service area. Base charges for the first month of service shall be one-half of the base charge if service was approved on or after the 16th day of the month.

13.80.452 Hydrant testing charges.

There shall be a hydrant testing charge for flushing, general maintenance, testing of hydrant facility and operation of the hydrant as requested by the local fire department, special fire protection district, or owner of hydrant requesting utility operation of the hydrant. This charge shall apply for hydrants not owned by the utility division. Any repairs and associated work of the hydrant performed by the utility division will be at actual cost plus overhead.

13.80.455 Use of fire protection facilities for other purposes charges.

Whenever water is used from fire protection facilities, withdrawn for contractor water sales, or fire protection water is misused, such usages shall incur a flow meter charge, contractor base charge and contractor usage charge. The base charge for the first month of service shall be one-half of the contractor base charge if service was approved on or after the 16th day of the month. Any customer applying for water usage from fire protection facilities must establish a contractor customer account complete with all applicable fees and deposits at least two working days before water usage.

13.80.460 Charges for Low-Income Customers

(1) The fixed rates for low-income senior citizen residential customers and low-income totally disabled residential customers shall be 50% of the residential base charge that would otherwise apply. All consumption charges shall be as for residential customers as set forth in this chapter.

(2) All low-income senior citizen residential customers and low-income totally disabled residential customers applying for low-income senior citizen customer or totally disabled residential customer rates herein provided shall furnish a claim for exemption in such affidavit form as shall be prescribed by the administrator. Such form shall be furnished on or before January 31 of each year, within 30 days from the date of account opening, or unexpected sudden change of income status

13.80.470 Delinquent charges.

A delinquent charge shall be added to each unpaid bill if it is not paid by the due date. A door hanger charge shall be added to each unpaid bill if a door hanger for delinquency is made by utility personnel.

13.80.480 Overhead charges.

An overhead charge of the total costs for labor, materials, and equipment for work and services performed or installation of service water lines or other facilities by the utility division shall be added to the costs charged to the customer. Such overhead charge shall be to accommodate administration, supervision, and accounting costs. The overhead rate shall be as approved by resolution for the service area.

13.80.500 Method of billing and payment.

(1) Billing Method and Due Date. Every two-month period the utility division shall read the water meters for each customer that is provided water service by the utility division on the first three working days

of the billing month. Bills shall be mailed by the tenth day of the billing month. Payment shall be due on the tenth day of the next month.

(2) Receipt of Payment. The utility bill shall be paid in its entirety by the due date. Payment must be received by the close of business due date at: Lewis County, Fiscal Office, 351 NW North Street, Chehalis, WA 98532.

(3) Delinquent Payments. Payments not paid in full by the close of business due date will be considered delinquent. All late notices issued by the county shall include a delinquent charge which must be paid in addition to the utility bill. The county will prepare a list of delinquent customers on the twelfth (12th) day of the month following the billing month. If the utility bill is still not paid in full, then utility division personnel will place a door hanger at the delinquent utility customer's premises by the thirteenth (13th) day of the month following the billing month. There will be a door hanging charge added on the utility bill.

(4) Shut Off Water Service. If payment is not received in full within three (3) days from the date of the placed door hanger or by the sixteenth (16th) day of the month following the billing month, the utility division will immediately shut off the water service to such delinquent premises. Utility division personnel are not authorized to accept payment at the service address.

(5) Designated Dates. If designated days fall on nonworking days or other approved closure days of the utility division, the next working day will be used for that designated day. Subsequent designated days will not be adjusted to account for prior designated days.

(6) Delinquent Payment Recovery. All charges for water and sewer service when the account becomes delinquent and unpaid shall constitute a lien against the premises to which the service has been furnished. In the event an occupant of the premises moves to another location within a service area managed by the utility division and applies for utility service at the new location, services shall be denied at such new location until fees and charges for service at the first location are fully paid. All or part of the customer deposit may be applied to outstanding charges.

The utility division may record a lien in the office of the auditor of Lewis County against the property for which the service was connected or provided. Service meters shall be removed at these premises and future service to the property will depend on system availability. Such liens shall include all delinquent charges and costs incurred up to the removal of the service meter. The property owner shall be responsible for all cost incurred by the utility division, including reasonable attorney fees, for preparing and recording a lien and the court enforcement thereof.

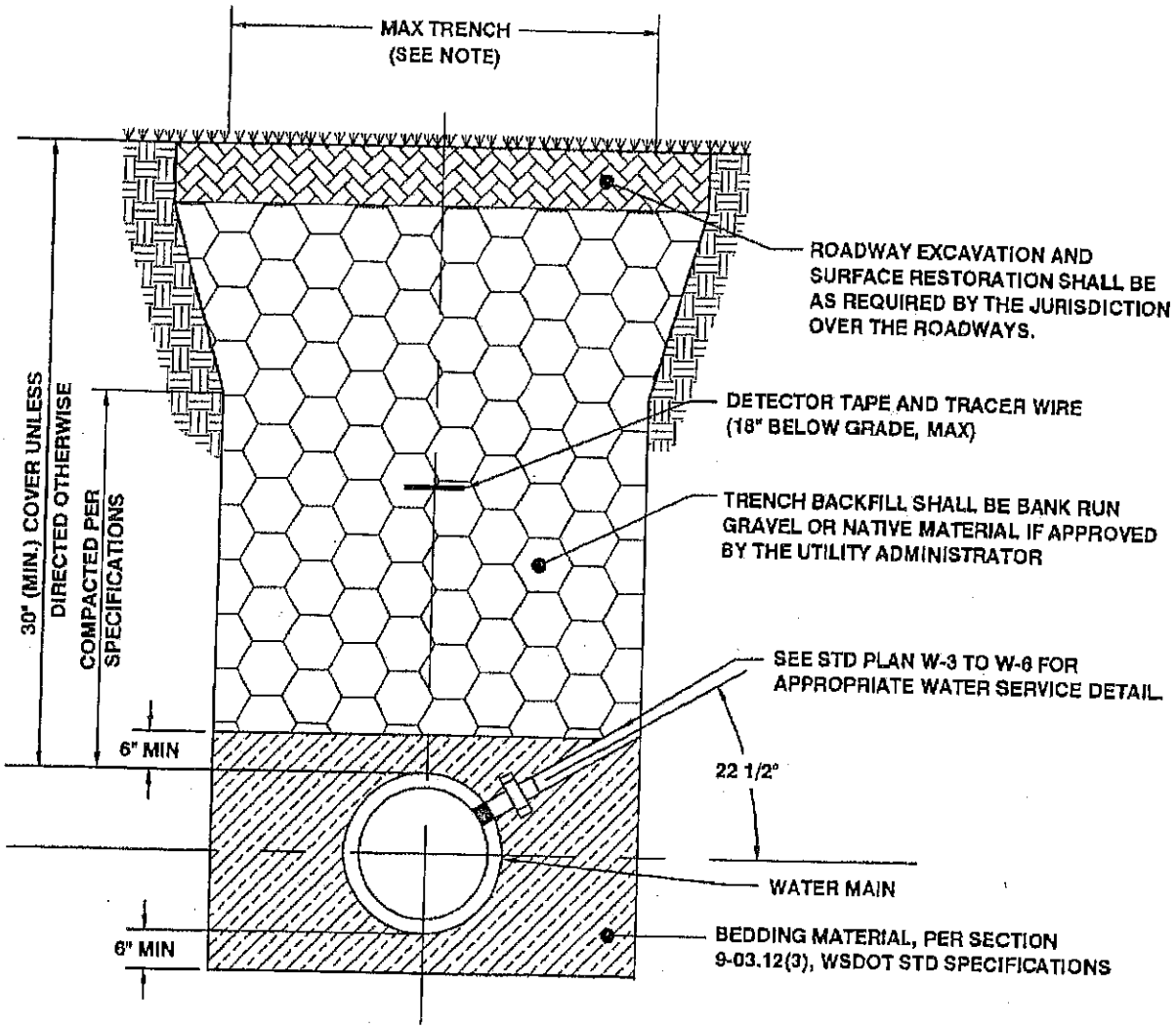

NOTES:

1. *MAXIMUM WIDTH OF TRENCH SHALL BE 1.5' PLUS 1.5 x PIPE I.D..*
2. *ALL MATERIALS, WORKMANSHIP AND INSTALLATION SHALL BE IN CONFORMANCE WITH THE MOST RECENT WSDOT STANDARD SPECIFICATIONS FOR ROAD, BRIDGE AND MUNICIPAL CONSTRUCTION (WSDOT STD SPECIFICATIONS) AS AMENDED BY THE UTILITY.*
3. *BEDDING SHALL BE COMPACTED TO 95% MAX, BACKFILL SHALL BE COMPACTED TO 85% IN UNPAVED AREAS AND 95% IN PAVED AND SHOULDER AREAS PER 2-03.3(14)D, WSDOT STD SPECIFICATIONS.*

DRAWING NOT TO SCALE

LEWIS COUNTY

WATER MAIN TRENCH

STD PLAN NO: **W-1**

APPROVED BY: _____ REVISED DATE: 2/8/16

Lewis County Engineer

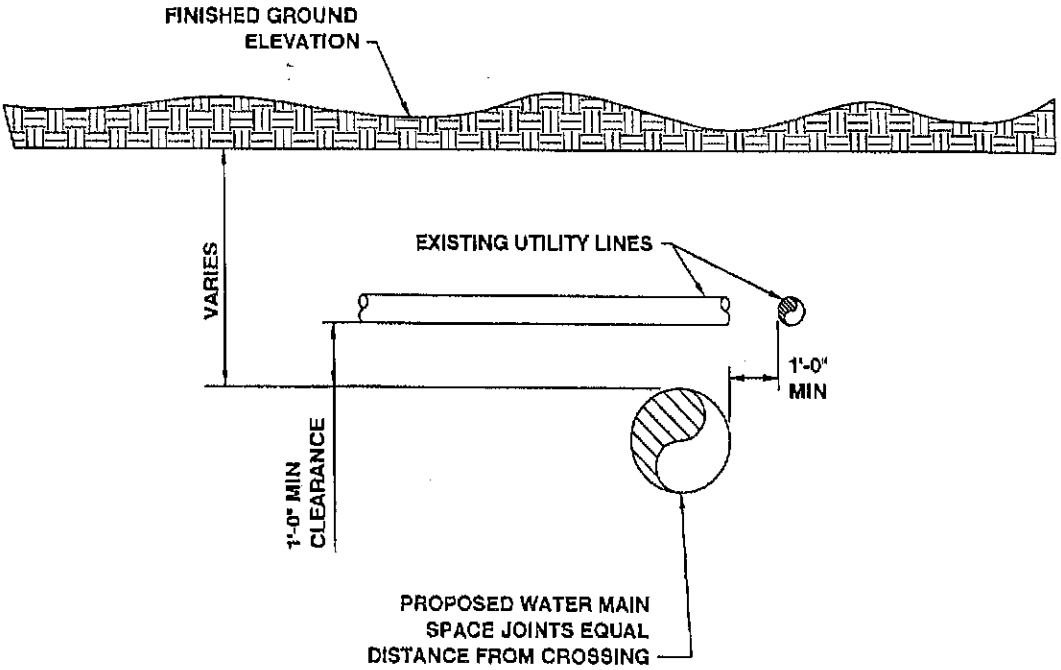

NOTES:

1. *CONCRETE ENCASEMENT SHALL BE USED, IF APPROVED BY THE UTILITY ADMINISTRATOR, AT LOCALIZED UTILITY CROSSING IF MINIMUM PIPE SEPARATION (ELEVATION) CANNOT BE MAINTAINED.*

2. *CONTRACTOR SHALL VERIFY LOCATION AND DEPTH OF EXISTING AND PROPOSED UTILITIES*

DRAWING NOT TO SCALE

LEWIS COUNTY

TYPICAL WATER CROSSING

STD PLAN NO: **W-2**

APPROVED BY: _____ ~~REVISED~~ DATE: 2/8/16

Lewis County Engineer

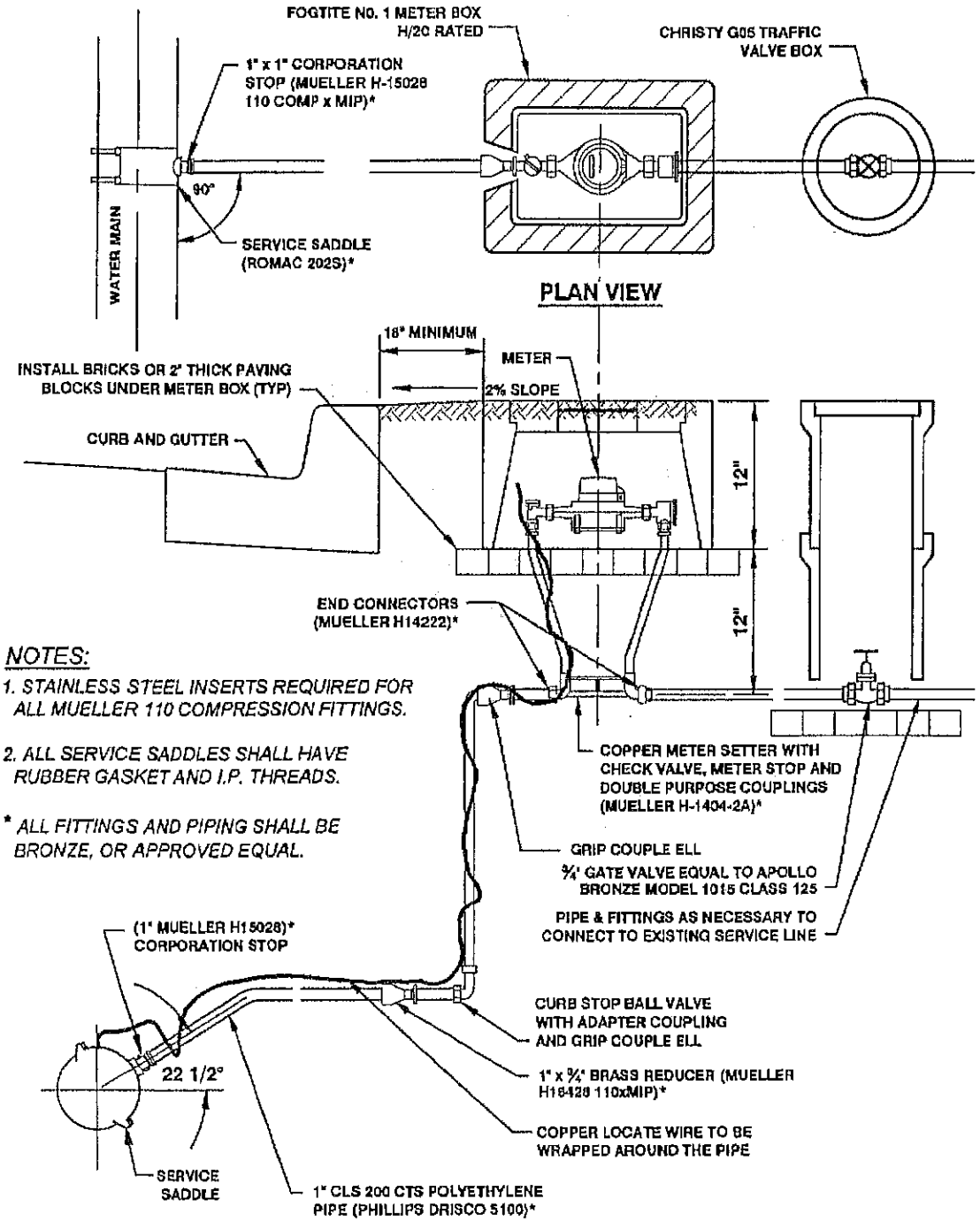

DRAWING NOT TO SCALE

3/4" AND 1" SINGLE METER SERVICE

STD PLAN NO: W-3

APPROVED BY: _____ REVISED DATE: 2/8/16

Lewis County Engineer

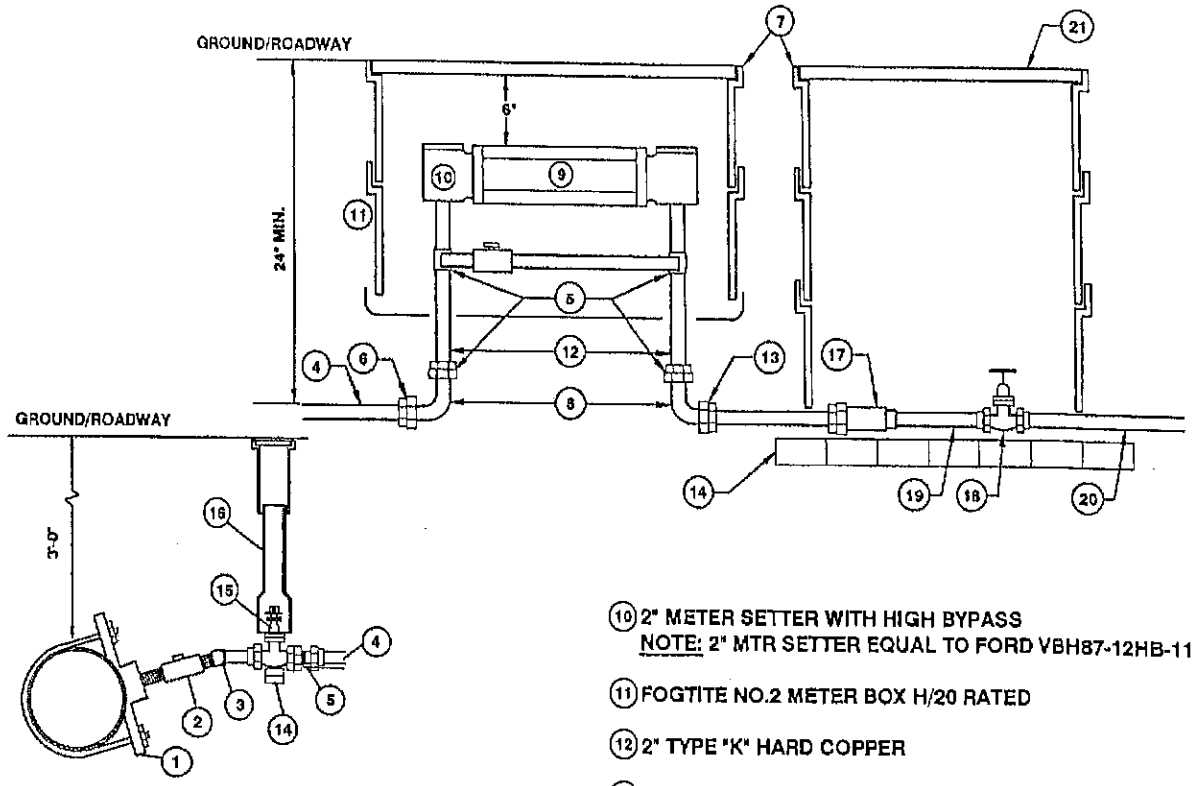

1. 2" (IP TAP) DOUBLE STRAP SADDLE EQUAL TO ROMAC STYLE 202S
2. 2" BRASS IP BALL CORP
3. 2 - 2" BRASS STREET ELLS FOR SWING JOINT
4. COPPER TYPE K SOFT PIPE (2")
5. 2" MIPT X CTS GRIP FITTING
6. 2" FIPT X CTS GRIP FITTING
7. CONTRACTOR SHALL INSTALL METER BOXES SO THAT THERE IS AT LEAST 6" OF SEPARATION TOP EDGE TO TOP EDGE
8. 2" BRASS ST ELL
9. METER SPACER TO BE SUPPLIED AND INSTALLED BY THE CONTRACTOR. SPACER MUST HAVE A MINIMUM OF 8 - 1/4" HOLES DRILLED IN SPACER BODY.

   NOTE: COUNTY TO SUPPLY 1-1/2" OR 2" METER AS REQUESTED BY PROPERTY OWNER. IF 1-1/2" METER IS USED COUNTY WILL SUPPLY REDUCERS TO CONNECT METER.
10. 2" METER SETTER WITH HIGH BYPASS
    NOTE: 2" MTR SETTER EQUAL TO FORD VBH87-12HB-1177
11. FOGTITE NO.2 METER BOX H/20 RATED
12. 2" TYPE "K" HARD COPPER
13. SCHEDULE 40 2" PVC CAP REMOVED WHEN CONNECTION MADE TO CUSTOMER
14. 4"X4"X8" CONCRETE BLOCK SUPPORTS
15. 2" RESILIENT WEDGE GATE VALVE (FIP X FIP) WITH 2" AWWA OPERATING NUT
16. 2 PIECE VALVE BOX
17. APOLLO BRONZE MODEL CVBE SOFT SEAT CHECK VALVE (61-500/600 SERIES) THDxTHD OR EQUAL
18. 2" GV EQUAL TO APOLLO BRONZE MODEL 1015 CLASS 125
19. 2" BRASS SPOOL, LTF
20. PIPE AND FITTINGS NECESSARY TO CONNECT TO EXISTING SERVICE LINE
21. FOGTITE NO.1 METER BOX H/20 RATED

NOTES:

1. *2" METER SETTER EQUAL TO: VBB87-12HB-1177 FOR EXISTING SERVICE*
2. *SERVICE TAP TO MAIN SHALL BE ANGLED AND NOT EXCEED 22 DEGREES*

DRAWING NOT TO SCALE

2" WATER SERVICE

STD PLAN NO: W-4

LEWIS COUNTY

APPROVED BY: _____ ~~REVISED~~ DATE: 2/8/12

Lewis County Engineer

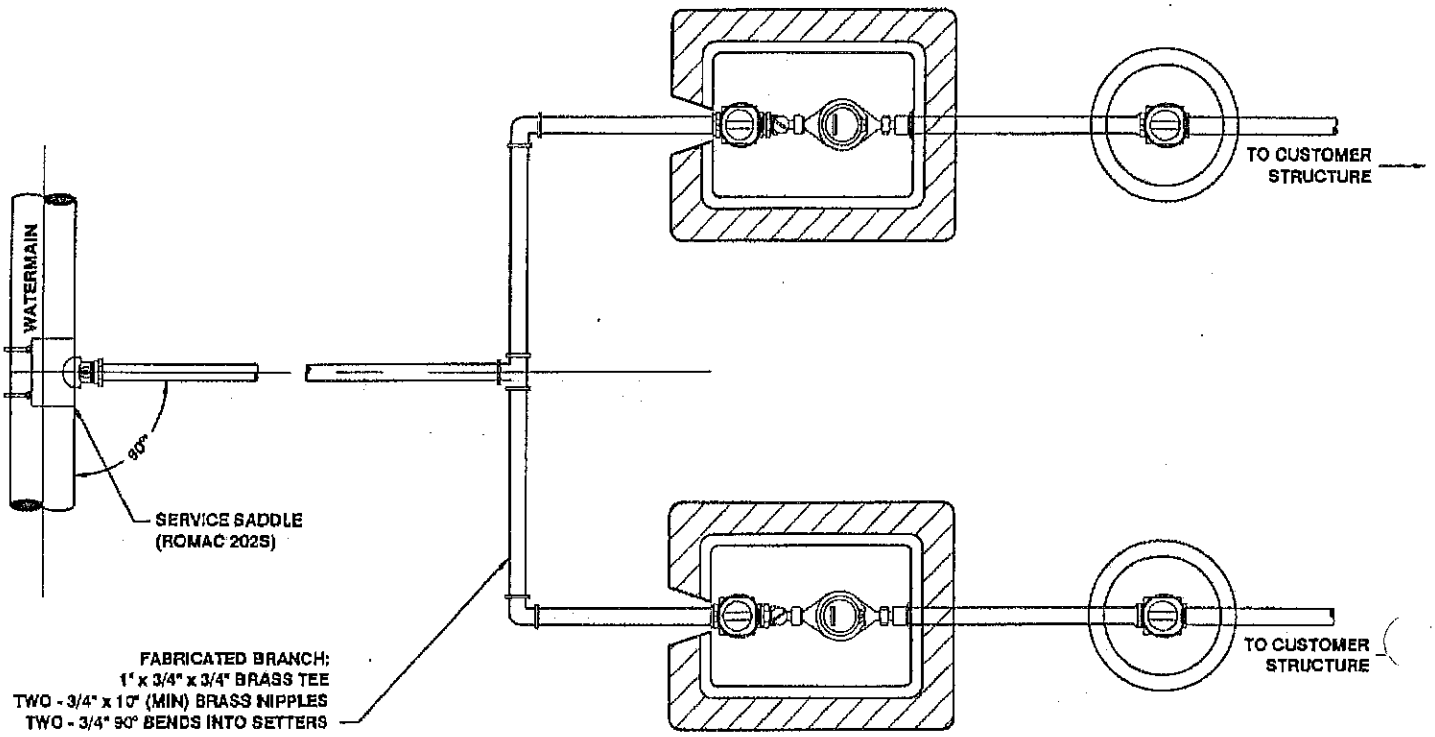

PLAN VIEW

NOTES:

1. *SEE STANDARD DETAIL W-3 FOR CONNECTION TO MAIN AND SINGLE METER SERVICE DETAILS*

DRAWING NOT TO SCALE

1" DUAL WATER SERVICE

STD PLAN NO: W-5

APPROVED BY: _____ REVISED DATE: 2/8/12

Lewis County Engineer

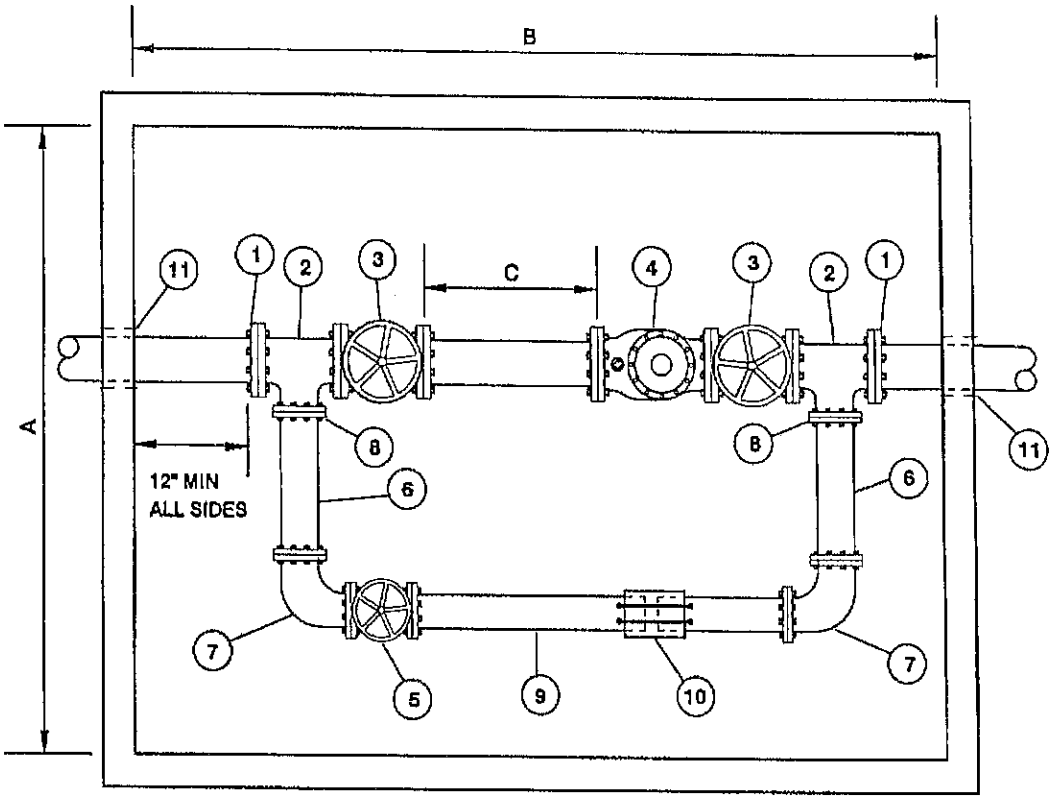

METER	Minimum Dimensions "A"	"B"	"C"	DOOR SIZE	VAULT DEPTH	TEE
3" Compound	3'6"	5'6"	15"	3' X 3'	5'0"	3"X11/2"
4" Compound	3'6"	8'0"	20"	3' X 3'	5'0"	4"X2"
6" Compound	3'6"	8'0"	30"	3' X 3'	5'0"	6"X4"
8" Compound	4'6"	10'0"	40"	4' X 4'	5'0"	8"X6"

1. FLEX X FLG COUPLING
2. ALL-FLG TEE
3. FLG RES. SEATED GATE VALVE W/HAND WHEEL
4. COMPOUND METER
5. GATE VALVE W/HAND WHEEL
6. BRASS OR DUCTILE IRON NIPPLES
7. 90° ELBOWS (MATERIAL TO BE SAME AS PIPE)
8. COMPANION FLG
9. BRASS OR DUCTILE IRON PIPE
10. MECHANICAL COUPLING
11. PIPE SLEEVE

PLAN VIEW

NOTES:

1. *VAULT DIMENSIONS SHOWN ARE INSIDE (MIN) DIMENSIONS.*
2. *BACKFLOW PREVENTION IS NOT INCLUDED AS PART OF THIS DETAIL.*
3. *METER AND SERVICE LINE SIZES WILL VARY ACCORDING TO NEED.*
4. *ALL VAULTS WILL BE SUPPORTED BY ADEQUATE FOOTING OR FLOOR.*
5. *PIPE AND FIXTURES TO BE SET ON VALVE STANDS INSTALLED ACCORDING TO MANUFACTURERS SPECS.*
6. *DRAINAGE MUST BE PROVIDED FOR THE VAULT.*

DRAWING NOT TO SCALE

LEWIS COUNTY

WATER SERVICE (3" TO 8")

STD PLAN NO: W-6

APPROVED BY: _____ REVISED DATE: 2/8/16

Lewis County Engineer

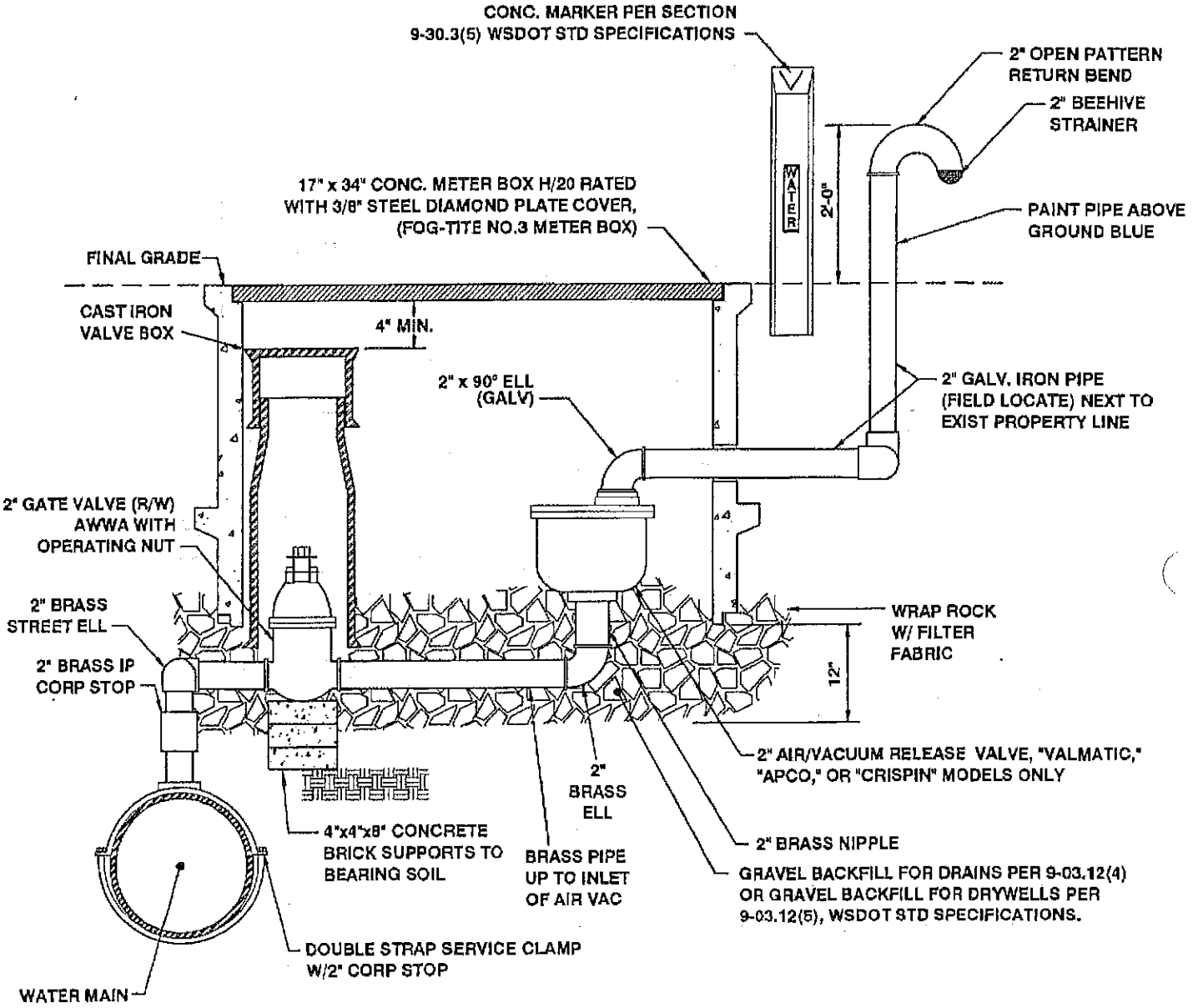

DRAWING NOT TO SCALE

AIR AND VACUUM ASSEMBLY

STD PLAN NO: W-7

LEWIS COUNTY

APPROVED BY: _____ REVISED DATE: 2/8/12

Lewis County Engineer

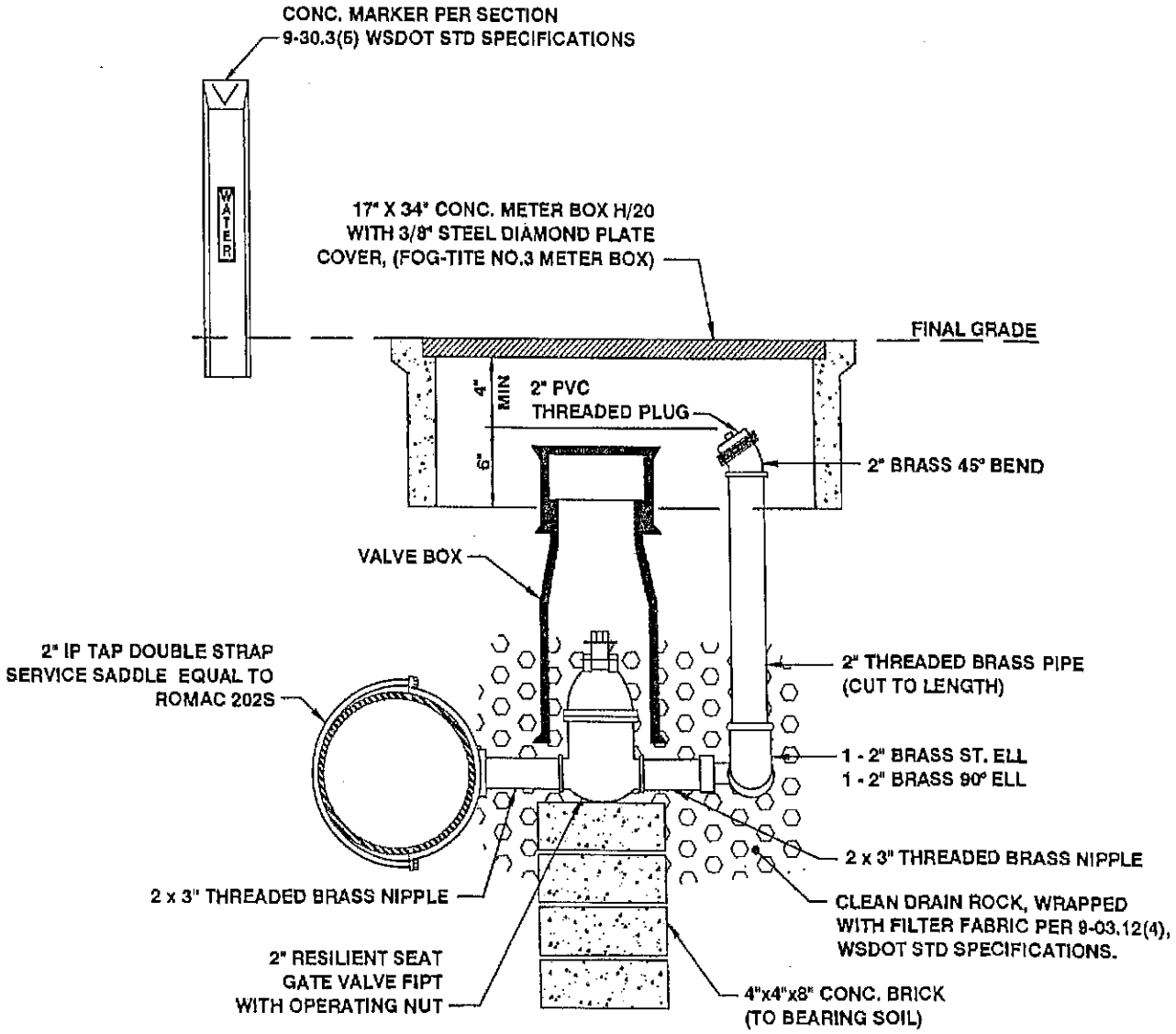

DRAWING NOT TO SCALE

BLOWOFF ASSEMBLY

STD PLAN NO: W-8

LEWIS COUNTY

APPROVED BY: _____ REVISED DATE: 2/8/16

Lewis County Engineer

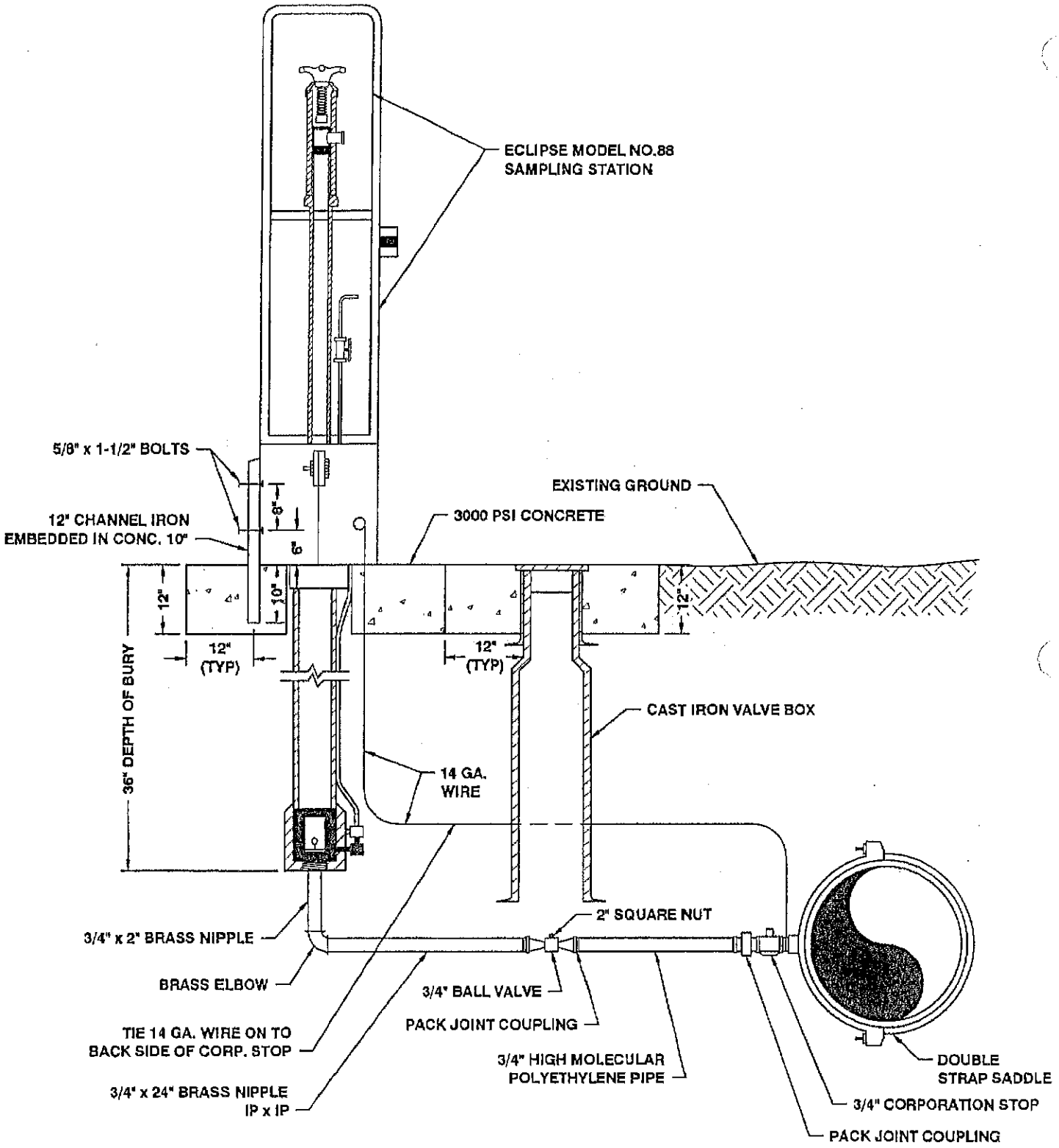

DRAWING NOT TO SCALE

WATER SAMPLING STATION

STD PLAN NO: W-9

LEWIS COUNTY

APPROVED BY: _____ REVISED DATE: 2/8/16

Lewis County Engineer

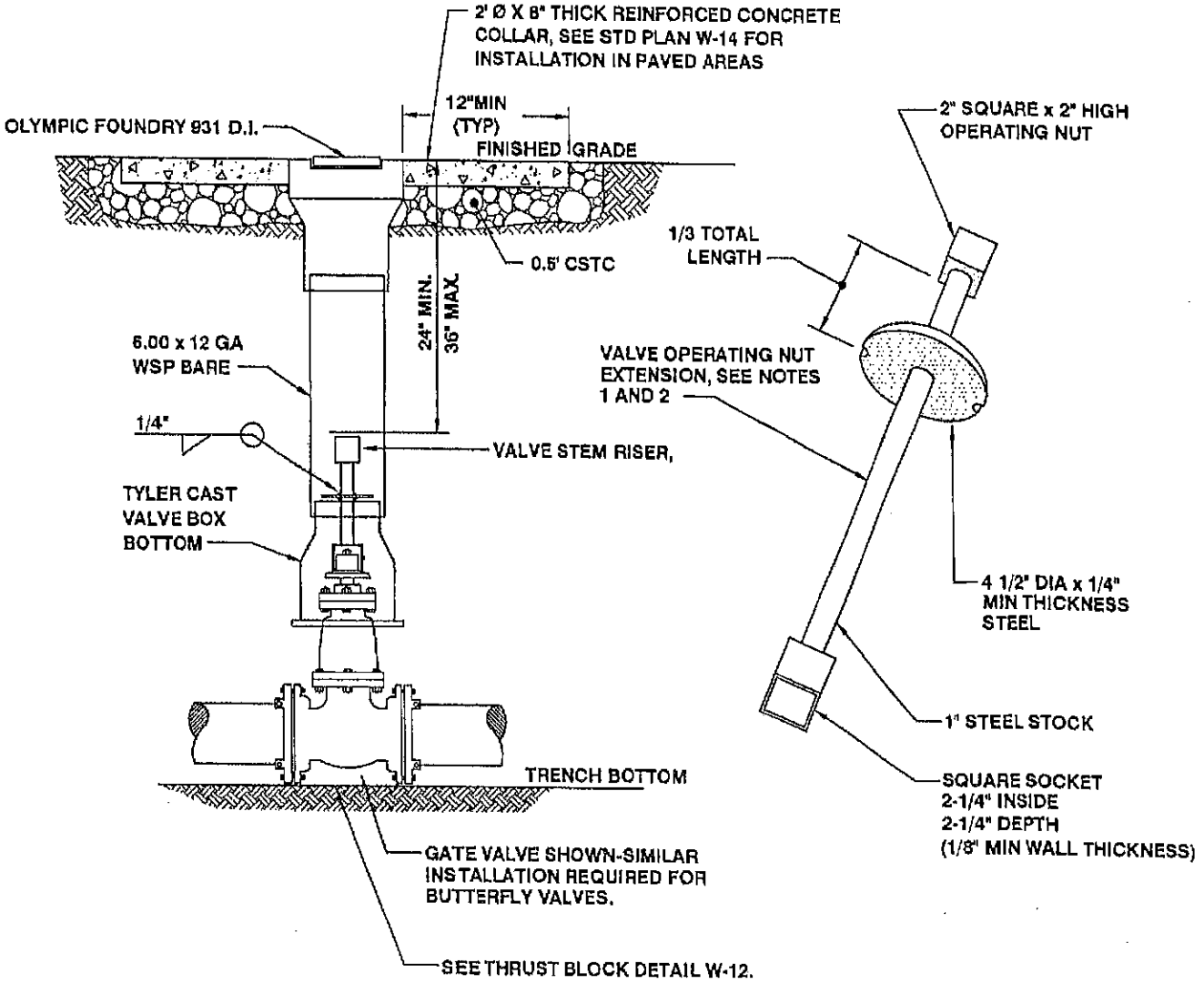

NOTES:

1. *VALVE OPERATING NUT EXTENSIONS ARE REQUIRED WHEN THE VALVE NUT IS MORE THAN THREE FEET BELOW FINISHED GRADE. EXTENSIONS ARE TO BE A MINIMUM OF ONE FOOT LONG. ONLY ONE EXTENSION WILL BE ALLOWED PER VALVE.*

2. *ALL VALVE OPERATING NUT EXTENSIONS ARE TO BE MADE OF STEEL, SIZED AS NOTED, AND PAINTED WITH TWO COATS OF ENAMEL PAINT.*

DRAWING NOT TO SCALE

LEWIS COUNTY

VALVE BOX DETAIL

STD PLAN NO: **W-10**

APPROVED BY: _____ REVISED DATE: _____

Lewis County Engineer

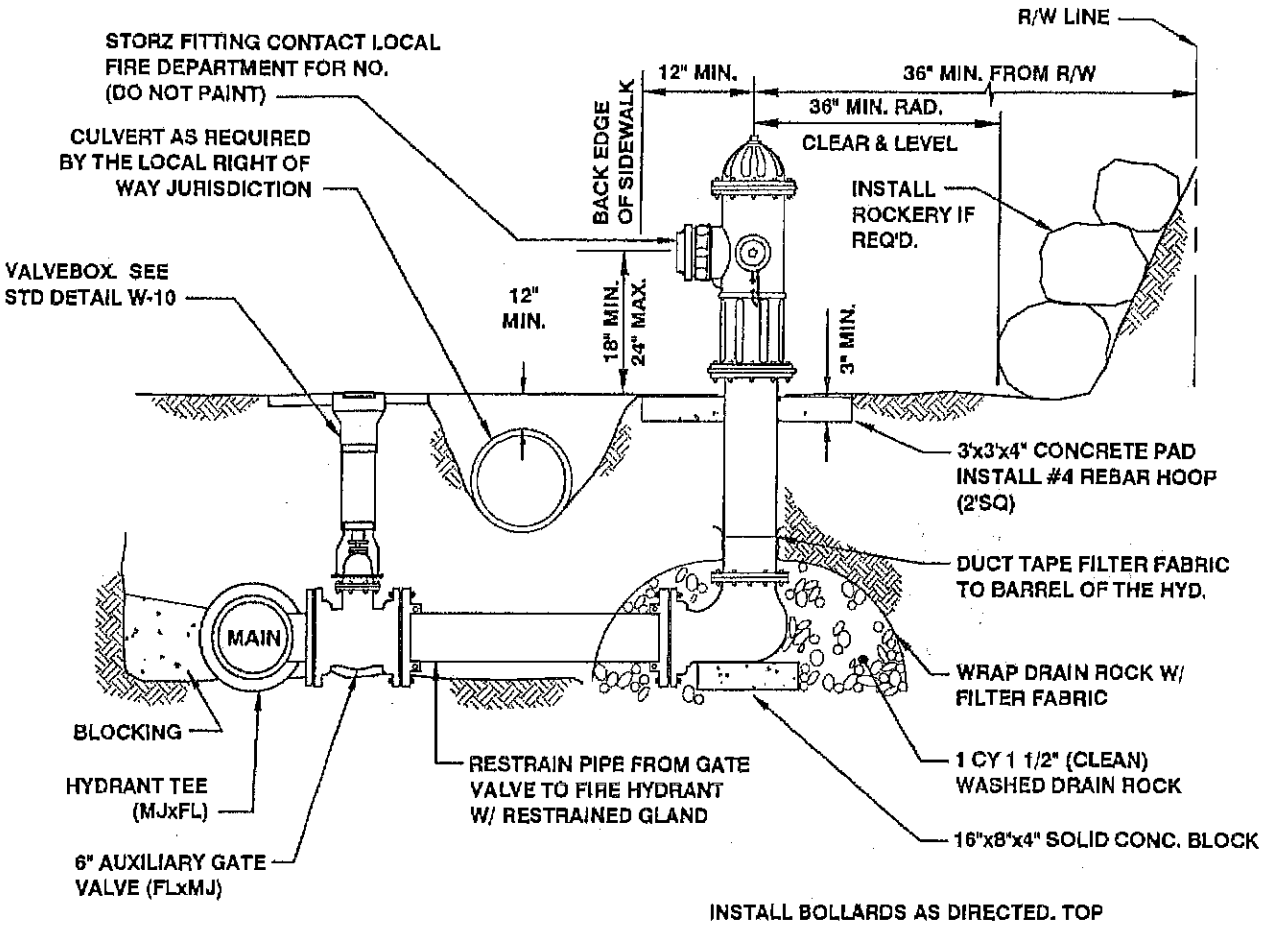

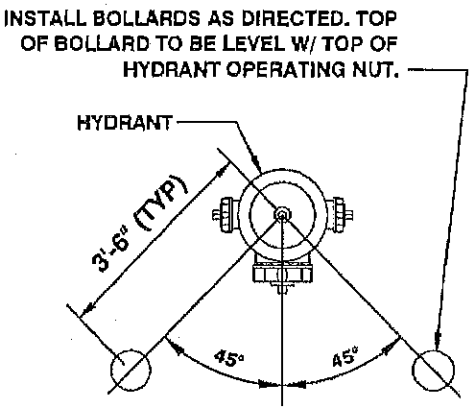

NOTES:

1. *PROVIDE LEVEL ACCESS TO FIRE HYDRANT.*
2. *FIRE HYDRANTS, BOLLARDS & VALVE BOX LIDS TO BE PAINTED WITH TWO COATS ALKYD GLOSS ENAMEL OF A COLOR DETERMINED BY THE UTILITY.*

DRAWING NOT TO SCALE

FIRE HYDRANT INSTALLATION

STD PLAN NO: W-11

LEWIS COUNTY

APPROVED BY: _____ REVISED DATE: 2/8/14

Lewis County Engineer

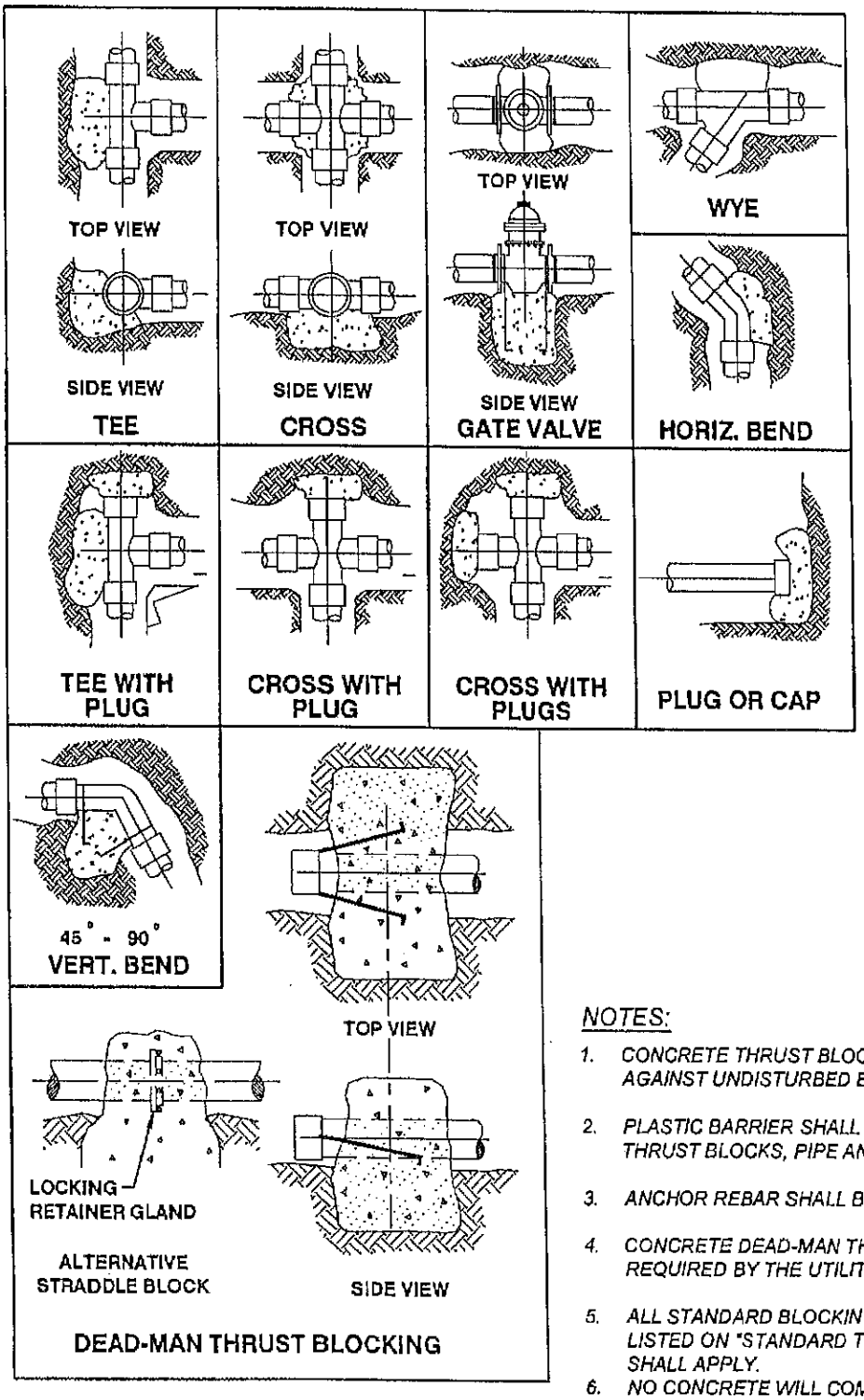

NOTES:

1. *CONCRETE THRUST BLOCKING TO BE POURED AGAINST UNDISTURBED EARTH.*
2. *PLASTIC BARRIER SHALL BE PLACED BETWEEN ALL THRUST BLOCKS, PIPE AND FITTINGS.*
3. *ANCHOR REBAR SHALL BE 5/8" MINIMUM DIAMETER.*
4. *CONCRETE DEAD-MAN THRUST BLOCKING MAY BE REQUIRED BY THE UTILITY.*
5. *ALL STANDARD BLOCKING AND THRUST CRITERIA AS LISTED ON "STANDARD THRUST LOADS DETAIL" W-13 SHALL APPLY.*
6. *NO CONCRETE WILL COME IN CONTACT WITH ANY MECHANICAL JOINTS.*

DRAWING NOT TO SCALE

LEWIS COUNTY

STANDARD BLOCKING DETAIL

STD PLAN NO: **W-12**

APPROVED BY: _____ REVISED DATE: 2/8/16

Lewis County Engineer

THRUST LOADS

THRUST AT FITTINGS IN POUNDS AT 200 POUNDS PER SQUARE INCH OF WATER PRESSURE

PIPE DIAMETER	90° BEND	45° BEND	22-1/2° BEND	11-1/4° BEND	DEAD END OR TEE
4"	3,600	2,000	1,000	500	2,600
6"	8,000	4,400	2,300	1,200	5,700
8"	14,300	7,700	4,000	2,000	10,100
10"	22,300	12,100	6,200	3,100	15,800
12"	32,000	17,400	8,900	4,500	22,700
14"	43,600	23,600	12,100	6,100	30,800
16"	57,000	30,800	15,700	7,900	40,300

NOTES:

1. *BLOCKING SHALL BE COMMERCIAL CONCRETE CLASS POURED IN PLACE AGAINST UNDISTURBED EARTH. FITTING SHALL BE ISOLATED FROM CONCRETE THRUST BLOCK WITH PLASTIC OR SIMILAR MATERIAL.*
2. *TO DETERMINE THE BEARING AREA OF THE THRUST BLOCK IN SQUARE FEET (S.F.):EXAMPLE: 12" - 90 DEG. BEND IN SAND AND GRAVEL. 32,000 LBS : 3000 LB/S.F. = 10.7 S.F. OF AREA*
3. *AREAS MUST BE ADJUSTED FOR OTHER PIPE SIZE, PRESSURES AND SOIL CONDITIONS.*
4. *BLOCKING SHALL BE ADEQUATE TO WITHSTAND FULL TEST PRESSURE AS WELL AS TO CONTINUOUSLY WITHSTAND OPERATING PRESSURE UNDER ALL CONDITIONS OF SERVICE.*
5. *BLOCKING FOR PIPES LESS THAN 4" DIA. WILL USE 4" PIPE VALUES.*

SAFE SOIL BEARING LOADS

FOR HORIZONTAL THRUSTS WHEN THE DEPTH OF COVER OVER THE PIPE EXCEEDS 2 FEET

SOIL	POUNDS PER SQUARE FOOT
MUCK,PEAT	0
SOFT CLAY	1,000
SAND	2,000
SAND & GRAVEL	3,000
SAND & GRAVEL CEMENTED WITH CLAY	4,000
HARD SHALE	10,000

DRAWING NOT TO SCALE

LEWIS COUNTY

STANDARD THRUST LOADS

STD PLAN NO: W-13

APPROVED BY: [signature] ~~REVISED~~ DATE: 2/8/16

Lewis County Engineer

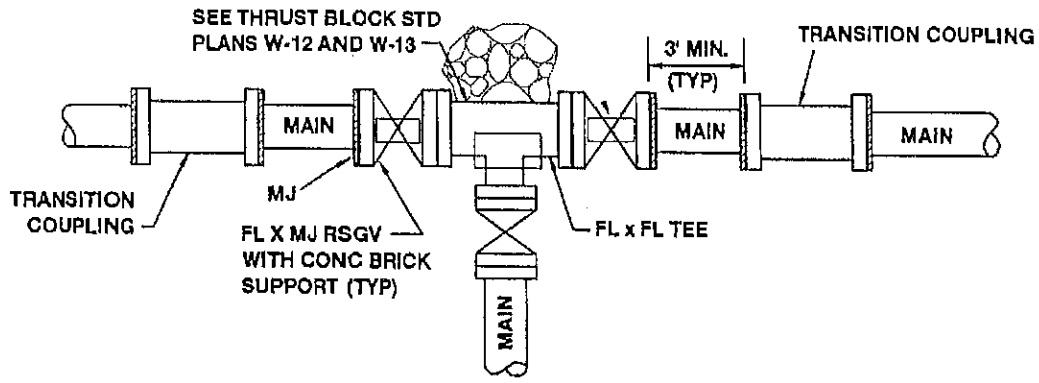

PLAN VIEW

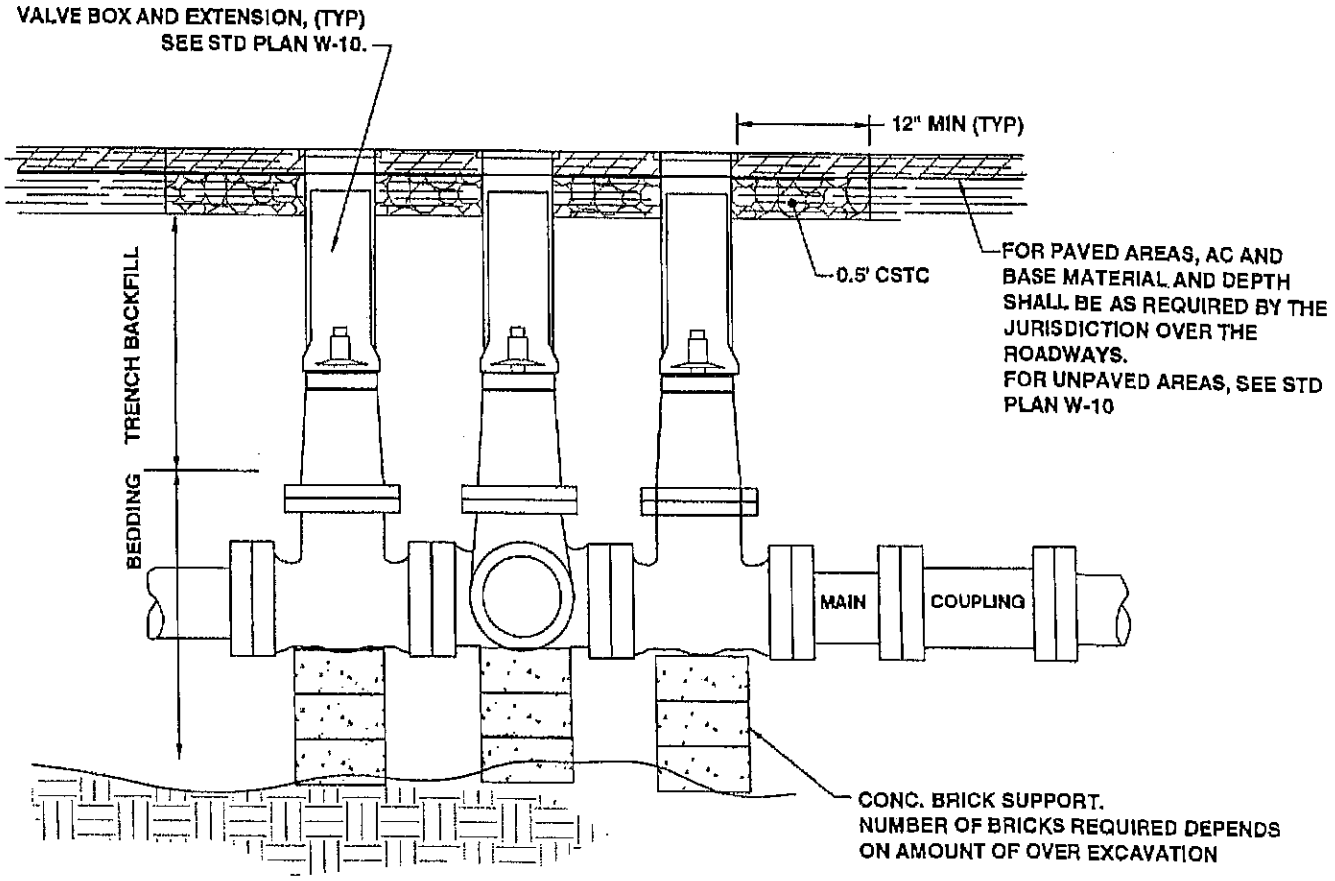

NOTES:

1. *COMPACTION OF BEDDING AND TRENCH BACKFILL SHALL BE PER STD PLAN W-1.*

DRAWING NOT TO SCALE

CONNECTION TO MAIN

STD PLAN NO: **W-14**

APPROVED BY: ~~REVISED~~ DATE: 2/8/16

Lewis County Engineer

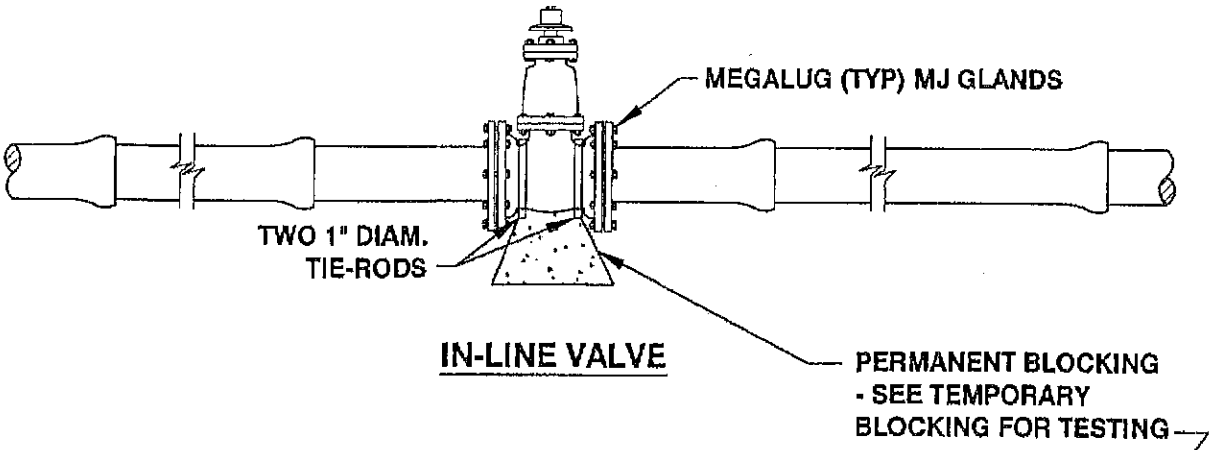

IN-LINE VALVE

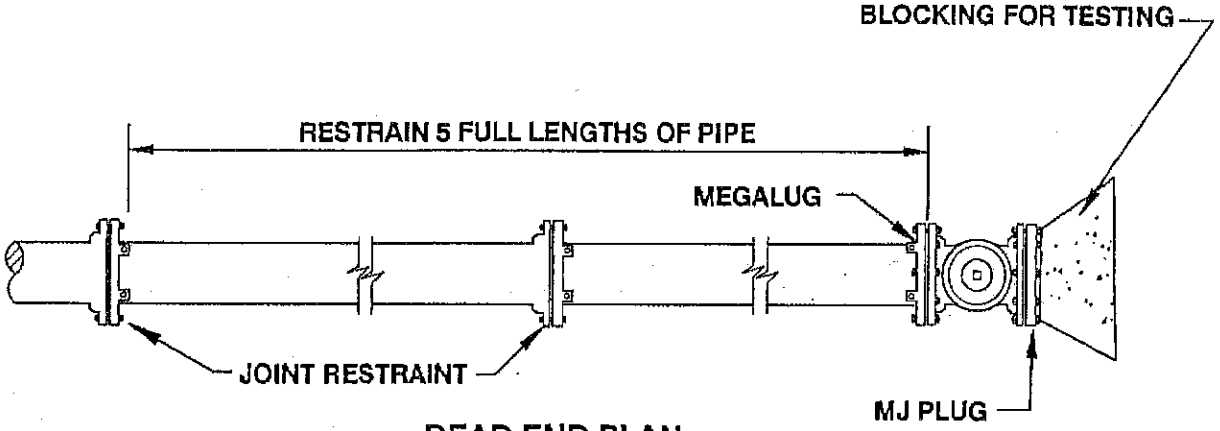

DEAD END PLAN

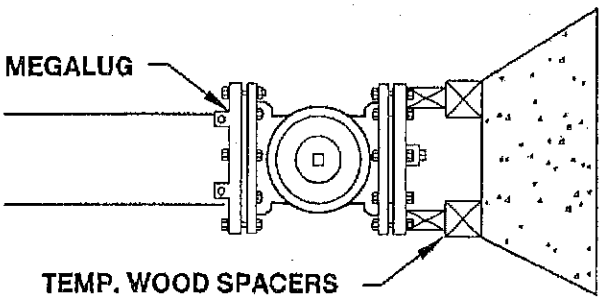

TEMPORARY BLOCKING

NOTES:

1. *ADDITIONAL RESTRAINT IS REQUIRED ON DEAD ENDS WITH POOR GROUND CONDITIONS.*
2. *MEGALUGS (EBAA IRON OR EQUAL) SHALL BE INSTALLED ON ALL INDICATED MECHANICAL JOINTS.*
3. *SEE STANDARD DETAIL W-12 FOR BEND BLOCKING REQUIREMENTS.*

DRAWING NOT TO SCALE

LEWIS COUNTY

VALVES AND RESTRAINT REQUIREMENT

STD PLAN NO: **W-15**

APPROVED BY: _____ REVISED DATE: 2/8/16

Lewis County Engineer

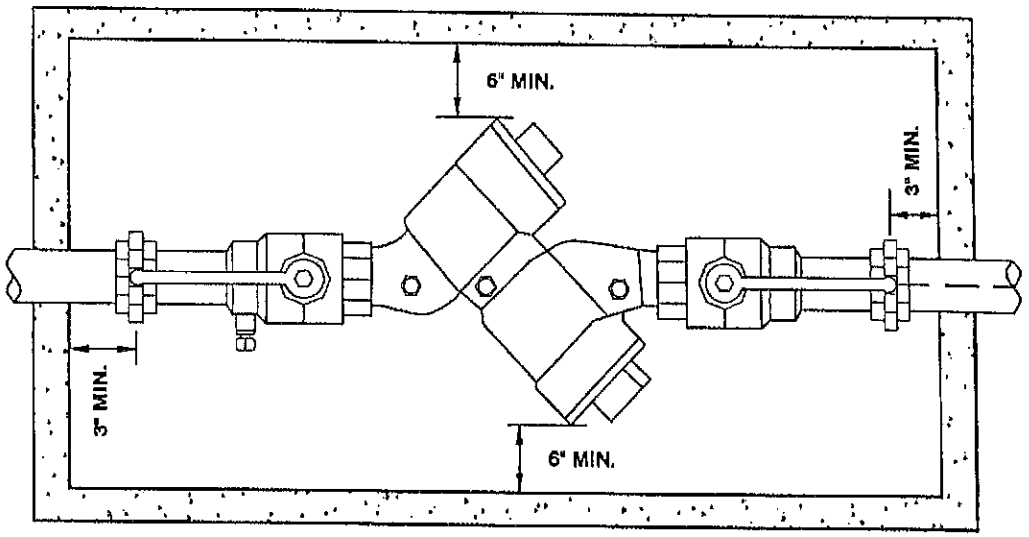

PLAN VIEW

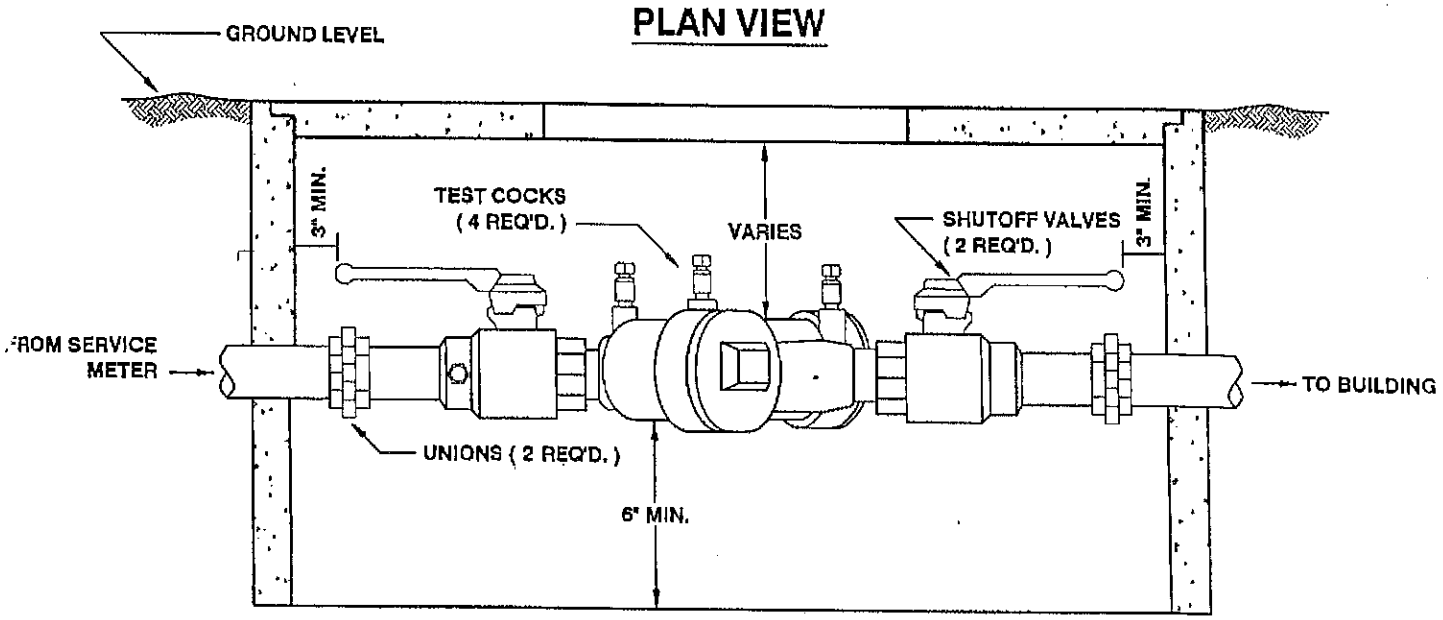

NOTES:

1. *DOUBLE CHECK VALVE ASSEMBLY SHALL BE DOH APPROVED MODEL.*
2. *VAULT SHALL BE ADEQUATELY SIZED FOR TESTING, REPAIR, AND MAINTENANCE.*
   MINIMUM BOX SIZE :
   - 3/4" TO 1" ASSEMBLIES: 10" X 13"
   - 1-1/4" TO 2" ASSEMBLIES: 14" X 20"
3. *INSTALL WITH TEST COCKS FACING UP OR TO ONE SIDE.*
4. *BE AWARE OF THERMAL EXPANSION DANGER.*

DRAWING NOT TO SCALE

DOUBLE CHECK DETECTOR ASSEMBLY
(2" OR SMALLER)

STD PLAN NO: **W-16**

APPROVED BY: _____ REVISED DATE: 2/8/16

Lewis County Engineer

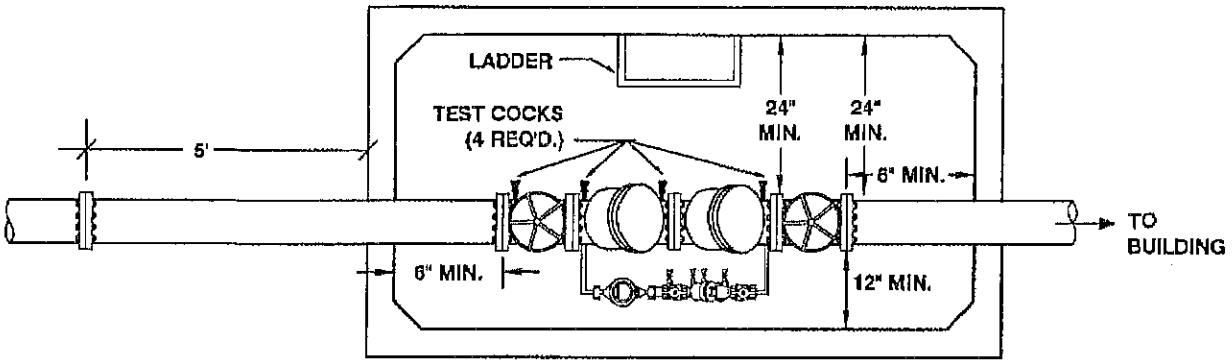

PLAN VIEW

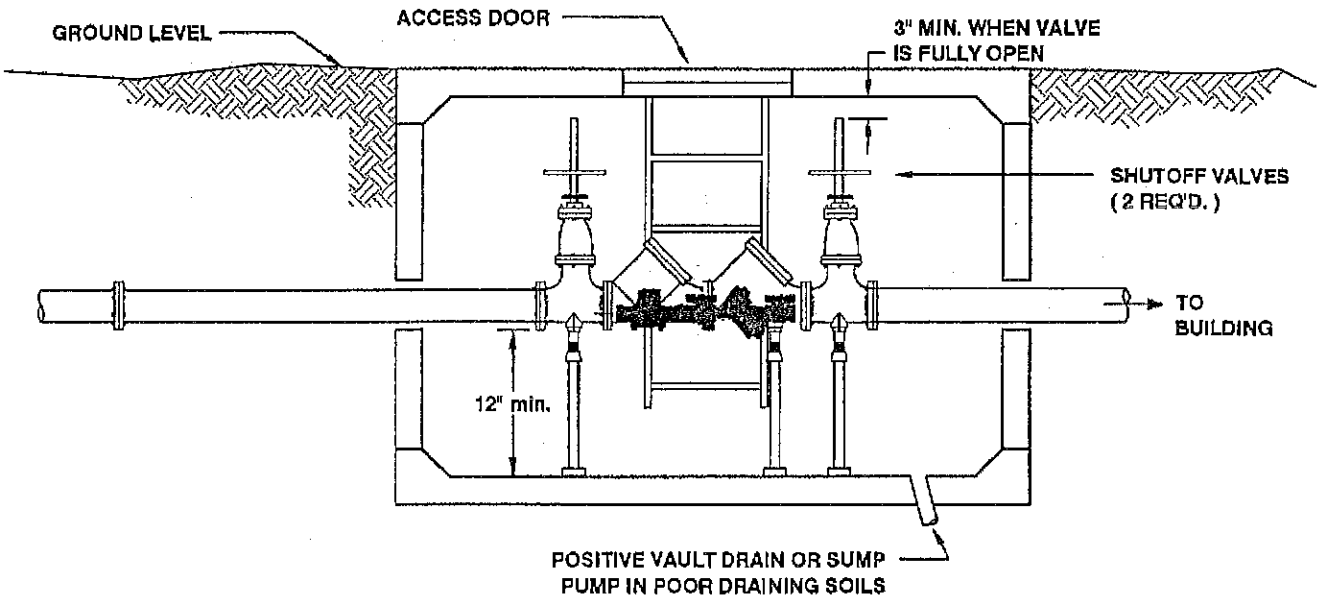

MATERIAL LIST:

1. *DOUBLE CHECK DETECTOR ASSEMBLY SHALL BE DOH APPROVED MODEL.*
2. *SUPPORT STANDS*
3. *STANDARD CONCRETE VAULT WITH BOTTOM AND DIAMOND PLATED, ALUMINUM LID WITH HINGED, LOCKABLE DOUBLE DOOR.*

DRAWING NOT TO SCALE

DOUBLE CHECK DETECTOR ASSEMBLY

(3" OR LARGER) BELOW GROUND

STD PLAN NO: **W-17**

APPROVED BY: _____ REVISED DATE: 2/8/14

Lewis County Engineer

A UTILITY APPROVED VALVE IS REQ'D BETWEEN THE SUPPLY MAIN AND THE ENCLOSURE

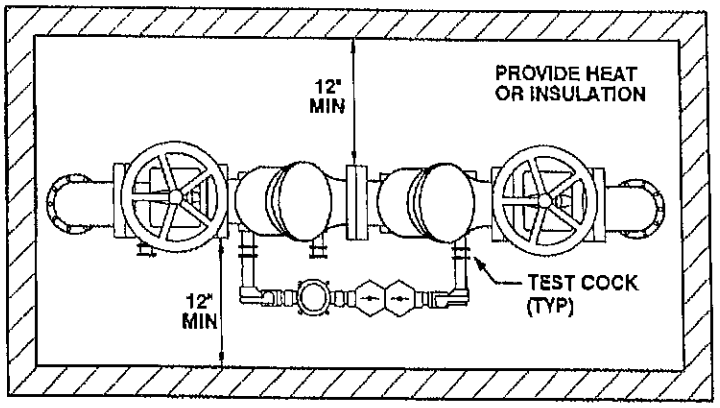

TOP VIEW

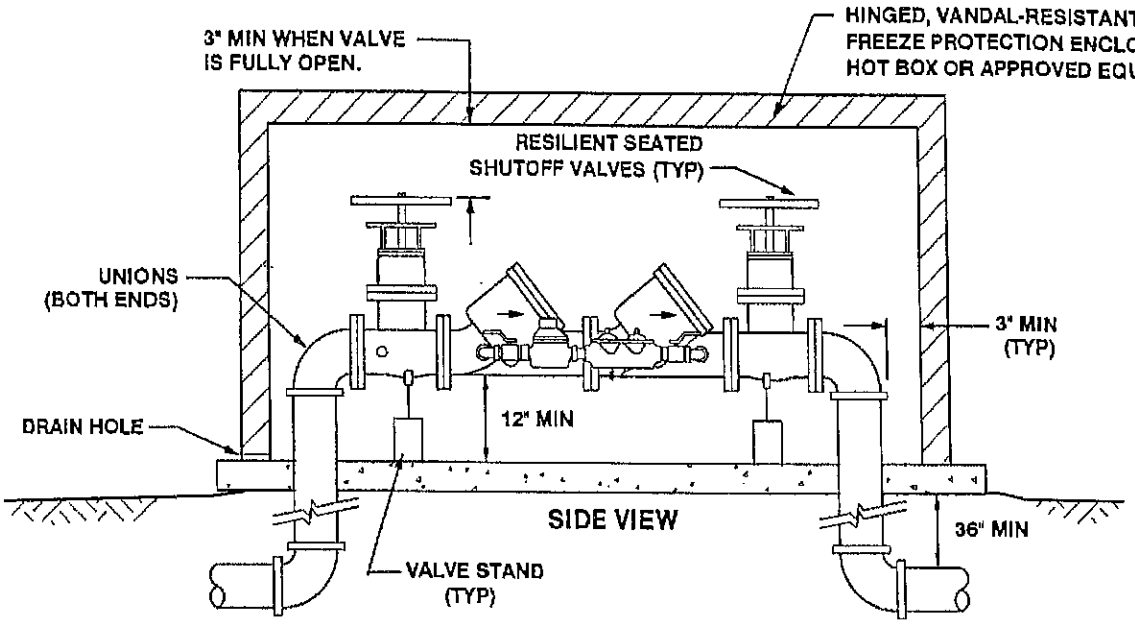

ABOVE GROUND INSTALLATION

NOTES:

1. *DOUBLE CHECK DETECTOR CHECK VALVE ASSEMBLY SHALL BE DOH APPROVED MODEL WITH 4 TEST COCKS AND A RESILIENT SEATED SHUT OFF VALVE MOUNTED AT EACH END.*
2. *THE BACKFLOW ASSEMBLY SHALL BE TESTED AFTER INSTALLATION BY A CERTIFIED BACKFLOW ASSEMBLY TESTER PRIOR TO UTILITY ACCEPTANCE. ANNUAL TESTING IS REQUIRED THEREAFTER.*
3. *ALL PIPE, VALVE, AND FITTING JOINTS FROM THE SUPPLY MAIN, SHALL BE FLANGED AND RESTRAINED.*
4. *THE WATER LINE SHALL BE DISINFECTED, FLUSHED, AND PRESSURE TESTED PRIOR TO INSTALLING THE BACKFLOW ASSEMBLY.*
5. *THE BACKFLOW ASSEMBLY SHALL BE PROTECTED FROM FREEZING AND FLOODING.*
6. *THE PIPE ENTRANCE AND EXIT SHALL BE SEALED TO BE WATER TIGHT.*
7. *ALL ENCLOSURES SHALL BE PRE-APPROVED BY THE UTILITY, PRIOR TO INSTALLATION.*
8. *ENCLOSURES SHALL BE INSTALLED ABOVE GROUND AT PROPERTY LINE ON OWNERS PROPERTY.*
9. *ENCLOSURES SHALL HAVE A MINIMUM OF 3' CLEARANCE FROM ALL STRUCTURES.*
10. *VALVE STANDS SHALL BE INSTALLED ACCORDING TO MANUFACTURERS RECOMMENDATIONS.*

DRAWING NOT TO SCALE

LEWIS COUNTY

DOUBLE CHECK DETECTOR ASSEMBLY
(3" OR LARGER) ABOVE GROUND

STD PLAN NO: W-18

APPROVED BY: _____ REVISED DATE: 2/8/16

Lewis County Engineer

NOTES:

1. *REDUCED PRESSURE BACKFLOW ASSEMBLY SHALL BE DOH APPROVED MODEL.*
2. *ENCLOSURE SHOULD BE ADEQUATELY SIZED FOR TESTING, REPAIR & MAINTENANCE.*
3. *ENCLOSURE SHALL BE CONSTRUCTED WITH ADEQUATE DRAIN FOR RELIEF VALVE DISCHARGE.*
4. *VERTICAL OR BELOW GROUND INSTALLATIONS ARE NOT ACCEPTABLE.*
5. *BE AWARE OF THERMAL EXPANSION DANGER.*

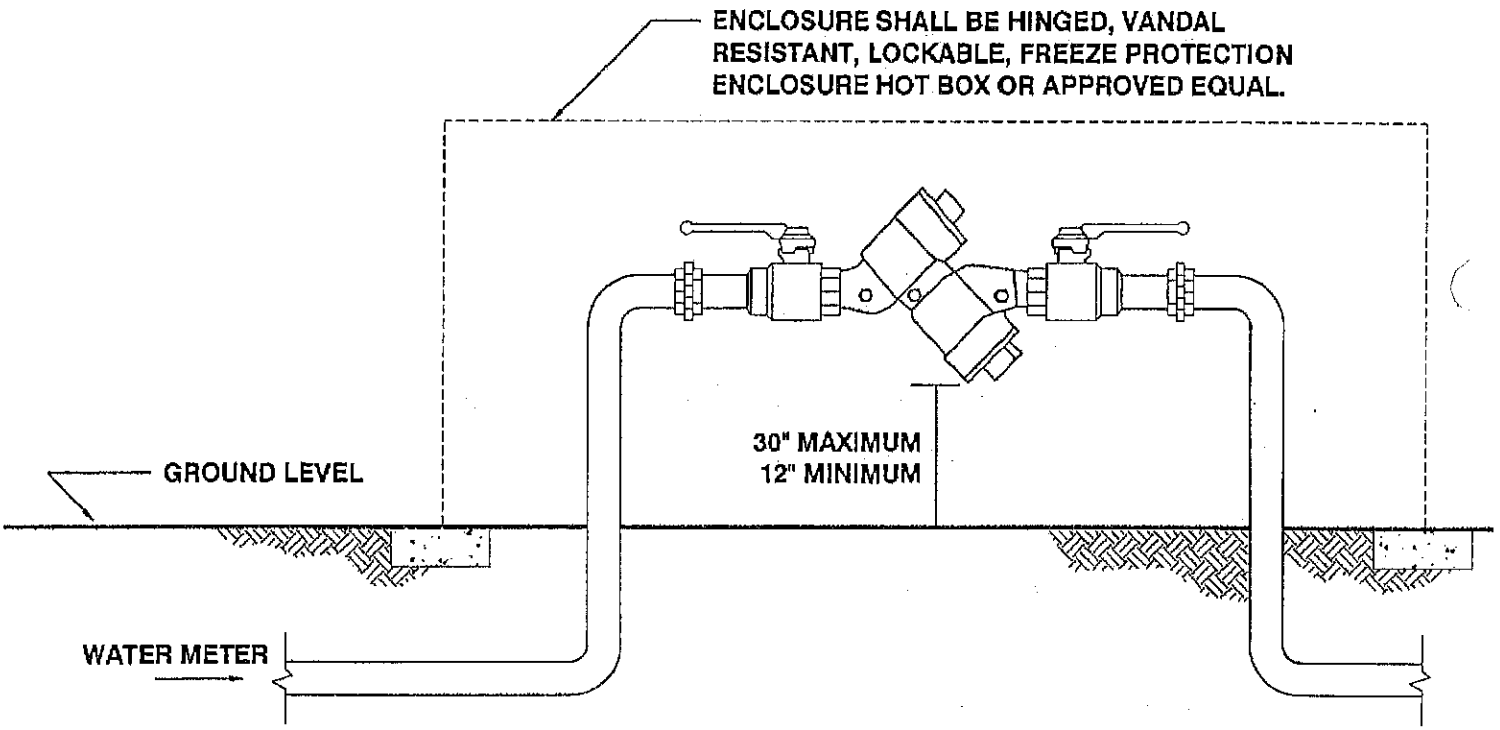

DRAWING NOT TO SCALE

REDUCED PRESSURE BACKFLOW ASSEMBLY (2" OR SMALLER)

STD PLAN NO: W-19

APPROVED BY: _____ ~~REVISED~~ DATE: 2/8/16

Lewis County Engineer

A UTILITY APPROVED VALVE IS REQ'D. BETWEEN THE SUPPLY MAIN AND THE ENCLOSURE.

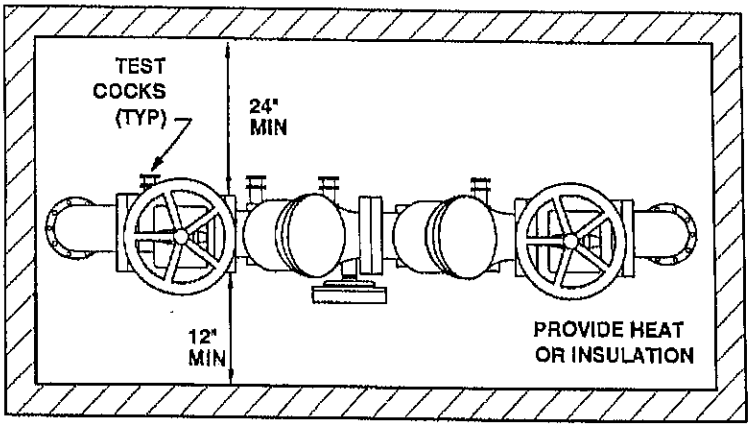

TOP VIEW

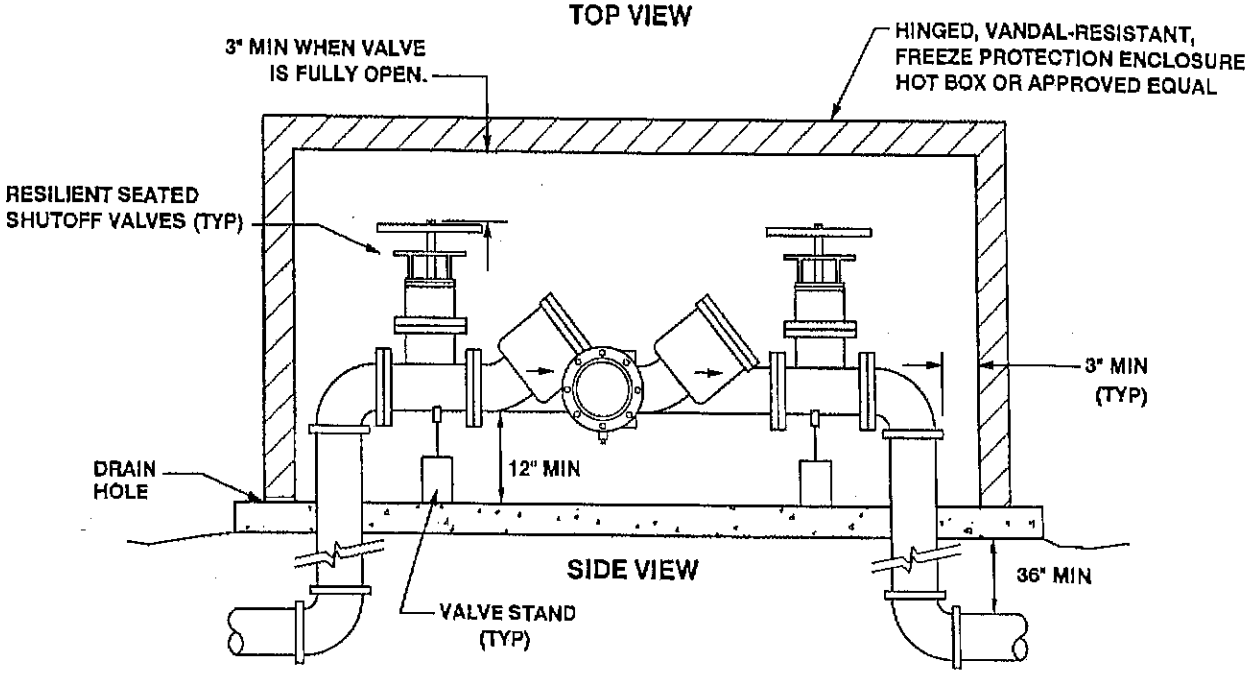

ABOVE GROUND INSTALLATION

NOTES:

1. *BACKFLOW ASSEMBLY SHALL BE A WASHINGTON STATE DEPT. OF HEALTH APPROVED MODEL.*
2. *APPROVED BACKFLOW ASSEMBLY TO LAY HORIZONTAL ONLY.*
3. *THE BACKFLOW ASSEMBLY SHALL BE TESTED AFTER INSTALLATION AND PRIOR TO ACCEPTANCE BY A CERTIFIED BACKFLOW ASSEMBLY TESTER. ANNUAL TESTING IS REQUIRED THEREAFTER. TEST RESULTS SHALL BE SENT TO THE UTILITY.*
4. *ALL PIPE, VALVE, AND FITTING JOINTS FROM THE SUPPLY MAIN, SHALL BE FLANGED AND RESTRAINED.*
5. *THE WATER LINE SHALL BE DISINFECTED, FLUSHED, AND PRESSURE TESTED PRIOR TO INSTALLING THE BACKFLOW ASSEMBLY.*
6. *THE BACKFLOW ASSEMBLY SHALL BE PROTECTED FROM FREEZING AND FLOODING.*
7. *SEAL PIPE ENTRANCE AND EXIT, THROUGH ENCLOSURE, SO AS TO BE WATER TIGHT.*
8. *ALL ENCLOSURES SHALL BE PRE-APPROVED BY THE UTILITY PRIOR TO INSTALLATION.*
9. *ENCLOSURES SHALL BE INSTALLED AT PROPERTY LINE ON OWNERS SIDE.*
10. *ENCLOSURES SHALL HAVE A MINIMUM OF 3' CLEARANCE FROM ALL STRUCTURES.*
11. *VALVE STANDS SHALL BE INSTALLED ACCORDING TO MANUFACTURERS RECOMMENDATIONS.*
12. *TEST COCKS SHALL BE LOCATED SO AS TO FACILITATE ACCESS.*

DRAWING NOT TO SCALE

LEWIS COUNTY

REDUCED PRESSURE BACKFLOW ASSEMBLY
(3" OR LARGER)

STD PLAN NO: W-20

APPROVED BY: ~~REVISED~~ DATE: 2/8/16

Lewis County Engineer

BOCC AGENDA ITEM QUESTIONNAIRE

Resolution: Ord 1265 **BOCC Meeting Date:** Feb 22, 2016

Suggested Wording for Agenda Item: **Agenda Type:** Hearing

An Ordinance of Lewis County, WA, repealing and replacing LCC Title 13 Public Utilities

Contact: Shirley Rook **Phone:** 740-2759

Department: Public Works

Action Needed: Approve Ordinance (traffic or other)

RECEIVED

FEB 11 2016

LEWIS CO. PROS. ATTY.

Description

In response to an immediate need to provide water service in the City of Vader water service area to correct health and safety deficiencies, Ordinances 1213 and 1221 were adopted in 2010 and 2011, respectively, to authorize Lewis County to construct, operate and maintain systems of sewerage and water according to RCW 36.94.

After five years of operating and managing the public Vader-Enchanted Valley Water System, new code provisions are needed to comply with necessary state and federal regulations to continue providing quality potable water to our water utility customers.

The proposed revisions to LCC Title 13 are mainly for clarification, inclusion of water design standards, a cross-connection control program and a water conservation program. The clarifications are made to be consistent with our operating procedures, and for conciseness and clarity.

There are many proposed changes and insertions. For efficiency and to avoid omission, staff is recommending the action of repealing and replacing all provisions to LCC Title 13 with the new text in Attachment A of Ordinance 1265.

Resolution No. 16-030 on February 8, 2016 set a hearing to hear public comment on the new regulations for LCC Title 13.

Publication Requirements:

Hearing Date: Feb 22, 2016

Publications:

Publication Dates:

16-017 SW

AFFIDAVIT OF PUBLICATION

STATE OF WASHINGTON
COUNTY OF LEWIS } SS

The undersigned, on oath state that he/she is an authorized representative of The East County Journal, a weekly newspaper, which newspaper is a legal newspaper of general circulation and it is now and has been for more than six month prior to the date of publication hereinafter referred to, published in the English language continuously as a weekly newspaper in Morton, Lewis County, Washington, and it is now and during all of said time was printed in an office maintained at the aforesaid place of publication of this newspaper.

The notice in the exact form annexed, was published in regular issues of The East County Journal which was regularly distributed to its subscribers during the below stated period.
The annexed notice, a

Public Hearing, Replace (LLC) Title 13 with proposed ordinance 1265

was published on Feb. 10 + 17, 2016

The amount of the fee charged for the foregoing publication is the sum

of $ 75.60

Jeremy Fink

Subscribed and sworn to before me this 18th day of Feb, 2016

Renae C. Justice
Notary Public in and for the
State of Washington
Residing in Onalaska

RENAE C. JUSTICE
COMMISSION EXPIRES
NOTARY
PUBLIC
JULY 29, 2019
STATE OF WASHINGTON

NOTICE OF PUBLIC HEARING
Before the LEWIS COUNTY BOARD OF COUNTY COMMISSIONERS

NOTICE IS HERBY GIVEN that the Lewis County, Washington, Board of County Commissioners will hold a public hearing for the purpose of receiving public testimony to repeal and replace Lewis County Code (LCC) Title 13 with proposed Ordinance 1265. The hearing will be held on or after 10:00 A.M. on Monday, February 22, 2016, in the Commissioners' Hearing Room, on the second floor of the Lewis County Courthouse, 351 NW North St, Chehalis, WA.

The revisions to LCC Title 13 are mainly for clarification and inclusion of: water design standards, cross-connection control program and water conservation program. After five years of operating and managing the public Vader-Enchanted Valley water system, these new code provisions are needed to comply with all necessary regulations to provide quality potable water to our customers.

The draft ordinance is available for review online at www.lewiscountywa.gov/publicworks, and at Lewis County Public Works, 2025 NE Kresky Ave, Chehalis, WA or contact Shirley.Kook@lewiscountywa.gov or 360-740-2759. Written comments may be submitted by 5:00 PM February 19, 2016 to the Clerk of the Board, 351 NW North St, Chehalis, WA 98532.

This meeting site is barrier free. People needing special assistance or accommodations should contact the Public Works Department 72 hours in Advance of the meeting.
Phone: (360) 740-1123

Published in The East County Journal
February 10, February 17, 2016.

BEFORE THE BOARD OF COUNTY COMMISSIONERS OF LEWIS COUNTY, WASHINGTON

ESTABLISHING WATER CONNECTION FEES AND RATES FOR THE VADER WATER SYSTEM	)))	**RESOLUTION NO. 11-095**

WHEREAS, Lewis County established a Utility Division within the Department of Public Works per Ordinance 1215 on July 26, 2010; and

WHEREAS, Lewis County assumed full operation and management of the City of Vader water system on January 1, 2011 through the State receivership process to correct health and safety deficiencies; and

WHEREAS, connection fees and rates are to be established by the Board per Section 13.20.040 of the Lewis County Code; and

WHEREAS, the Board has reviewed the proposed connection fees and rates (attached as Attachment A); and

WHEREAS, the Board has conducted a public hearing on March 21, 2011 about the proposed fees and rates for the City of Vader water system; and

WHEREAS, the Board has reviewed testimony from the public hearing; and

WHEREAS, it is in the best public interest to approve these connection fees and rates for the City of Vader water system.

NOW THEREFORE BE IT RESOLVED, that the water service connection fees and rates for the Vader water system are approved and shall be effective for the water connection services as of April 1, 2011.

DONE IN OPEN SESSION this 21st day of March 2011.

APPROVED AS TO FORM:
Jonathan L. Meyer, Prosecuting Attorney

By: Civil Deputy

BOARD OF COUNTY COMMISSIONERS
LEWIS COUNTY, WASHINGTON

Ron Averill, Chairman

F. Lee Grose, Vice Chairman

P.W. Schulte, Member

ATTEST:

Karri Muir, Clerk of the Board

SEAL OF LEWIS COUNTY, WASHINGTON — BOARD OF COUNTY COMMISSIONERS — SINCE 1845 — WASHINGTON'S 1st COUNTY

Resolution No. 11-095

ATTACHMENT A

UTILITY FEES AND RATES
FOR THE
VADER WATER SYSTEM

CUSTOMER DEPOSIT FOR NEW ACCOUNTS:			
Residential			$100.00
Commercial			$200.00
CONNECTION CHARGES:			
Service Size:	¾"	Meter Size: 5/8"x3/4"	$2,500.00
	1"	1"	$2,500.00
	1-1/2"	1-1/2"	$2,500.00
	2"	2"	$3,000.00
	Above 2"	4" and larger	Actual Cost plus Overhead
DELINQUENT CHARGE			$25.00
DOORHANGER CHARGE			$25.00
METER TESTING CHARGES:			
Meter Size:	5/8" x ¾"		$50.00
	1"		$50.00
	1-1/2"		$50.00
	2"		$100.00
	3"		$200.00
	6"		$300.00
	8"		$400.00
OVERHEAD RATE CHARGE			25%
SERVICE CALL CHARGES:			
During Normal working Hours*			$25.00
During Non-normal working Hours*			$75.00

*Add labor costs per employee and travel time at Overhead Rate Charge.

SERVICE METER CHARGE	$300.00
TURN-ON CHARGE	$25.00
SHUT-OFF - there is no shut off charge	
WATER USAGE CHARGES:	
Residential Base Charge	$43.50/month
Commercial Base Charge	$43.50/month
Usage Charge	$6.50/1000 gallons
WATER USAGE CHARGE FROM FIRE PROTECTION FACILITIES	$6.50/1000 gallons

SIGN IN SHEET

Page ___ of___

Vacker Utility Hearing 3-21-11

Date:_____
Lewis County Courthouse, second floor
351 NW North Street, Chehalis WA

	Name (Please Print)	Representing	Phone #	Email	Address
1.	Don Iddings				Vader
2.					
3.					
4.					
5.					
6.					
7.					
8.					
9.					
10.					
11.					
12.					
13.					
14.					

Water Utility Service

Associated with Land Development Activities

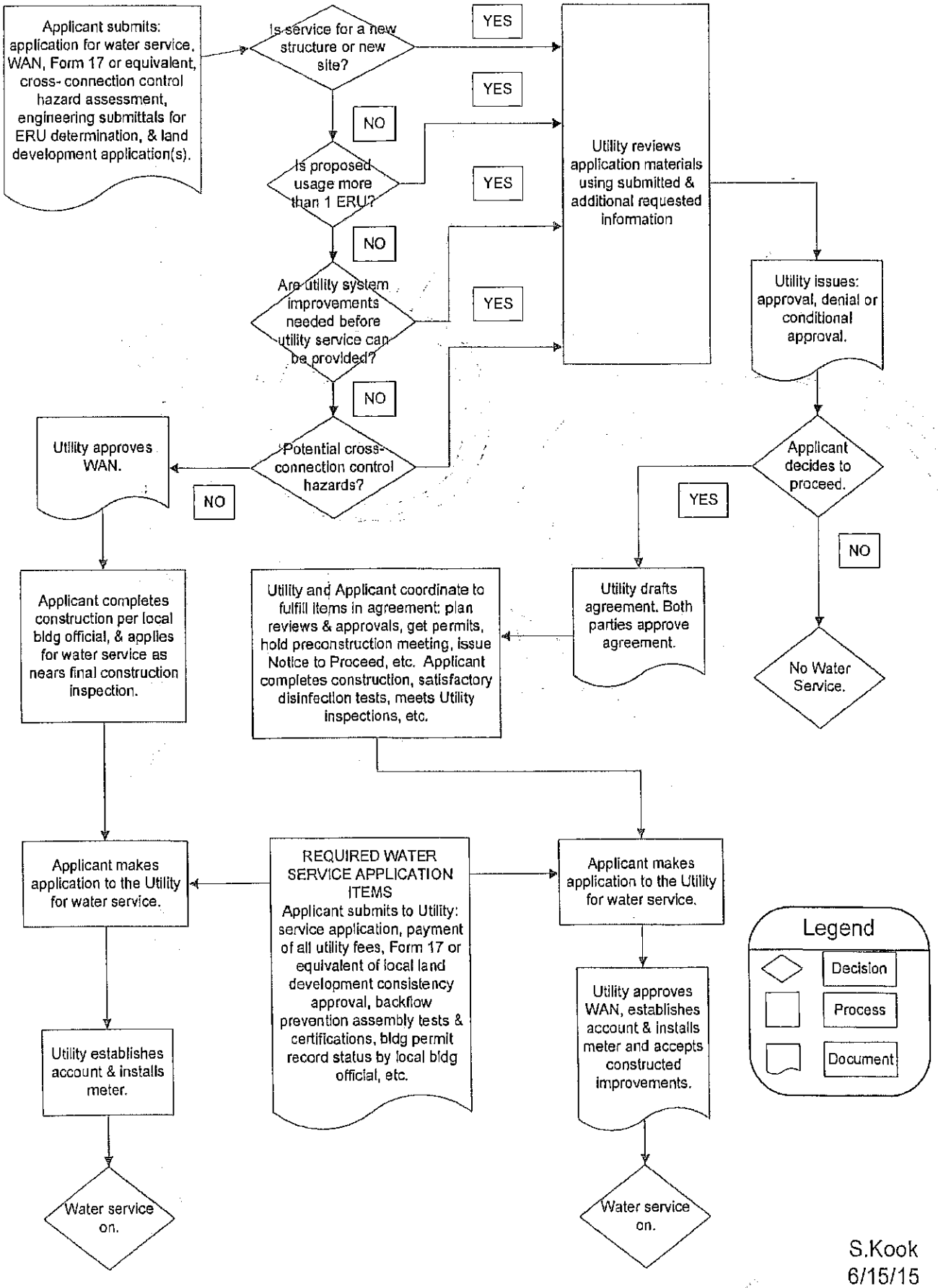

S.Kook
6/15/15

LEWIS COUNTY COMMUNITY DEVELOPMENT

WATER AVAILABILITY NOTIFICATION (WAN) - MUNICIPAL PUBLIC WATER SUPPLY

(Please Print)

WAN #: _____ Development Permit No.: _____

PROPERTY LOCATION: _____

Applicant's Name [as listed on application] _____

Applicant's Mailing Address: _____
Street

_____
City Zip

Type of development to be supplied by the Municipal Water System:
__ Single-family residential __ Multi-family residential __ Commercial __ Other (describe) _____
Number of connections necessary for proposal _____

Note: Certification of water availability by a municipal water provider only indicates that water adequate for the above proposed use is available on the date of certification. It is the responsibility of the developer to assure that all fees are paid and all other requirements are met for connection to the water system. Neither the Municipal water purveyor nor the County can guarantee future water connection until all fees are paid and all other requirements for connection are met.

Signature of Applicant _____ Date: _____

Note: A fee may be charged by the municipal water purveyor for review of this application.

Municipal Public Water Supply Availability

(To be completed by a water purveyor.)

System Name: _____ ID # _____

Membership/Account# _____ Total WSDOH approved connections _____

Total number of connections currently being served _____

This system is capable of and will supply water to: (check one /fill in the blanks)

☐ Tax Parcel # _____ Lot(s) or Space(s) # _____

☐ Short Plat # _____ Lot(s) or Space(s) # _____

This property is located at the address listed at the top of this page and the proposed use is indicated. On this date, municipal water, adequate for the proposed use indicated above, is available for the above project/use, consistent with the systems approved water plan, per WAC 246-290 or WAC 246-291. Connection to the system requires that all fees are paid and all other requirements shall be met by the applicant. Compliance and cousistency with adopted water plans, regulated by the state DOH, is the responsibility of the municipal water purveyor.

Certified by (Signature/ Title): _____ Date: _____

Address _____ Phone Number _____

NOTE: Availability of water does not guarantee the granting of a building or sewage permit. Unsuitable soils or site may result in denial of sewage and/or building permits.

file: CIP, 2015 WSP.xlsx sheet: ST-1

Preliminary Project Cost Estimate
ST-1 Reservoir Life Extension

#	ITEM	QUANTITY	UNIT	UNIT COST ($)	AMOUNT ($)
1	Mobilization & Cleanup	1	LUMP SUM	8,000	8,000
3	Structure Excavation	1	LUMP SUM	1,000	1,000
4	Reservoir Foundation	1	LUMP SUM	15,000	15,000
6	Site Piping	1	LUMP SUM	10,000	10,000
7	Electrical, Telemetry & Instrumentation	1	LUMP SUM	10,000	10,000
8	Recoating, Interior & Exterior	11,965	SF	9	107,685
9	Crushed Surfacing Base Course	140	CY	60	8,400
10	Crushed Surfacing Top Course	70	CY	60	4,200
11	Shoring or Extra Excavation Class B	1	LUMP SUM	400	400
	Subtotal				*$164,685*
	Sales Tax at 8%				$13,175
	Subtotal				*$177,860*
	Contingency at 20%				$35,572
	Total Estimated Construction Cost				*$213,432*
	Engineering & Administration Costs at 25%				$53,358
	Total Estimated Project Cost				**$266,790**

file: CIP, 2015 WSP.xlsx sheet: ST-2

Preliminary Project Cost Estimate
ST-2 Additional Reservoir

#	ITEM	QUANTITY	UNIT	UNIT COST ($)	AMOUNT ($)
1	Mobilization, Cleanup and Demobilization	1	LUMP SUM	25,000	25,000
2	Removal of Structure & Obstruction	1	LUMP SUM	4,000	4,000
3	Structure Excavation	1	LUMP SUM	5,000	5,000
4	Reservoir Foundation	1	LUMP SUM	30,000	30,000
5	Steel Reservoir	1	LUMP SUM	270,000	270,000
6	Site Piping	1	LUMP SUM	40,000	40,000
7	Electrical, Telemetry & Instrumentation	1	LUMP SUM	50,000	50,000
8	Landscaping	1	LUMP SUM	7,000	7,000
9	Crushed Surfacing Base Course	140	CY	60	8,400
10	Crushed Surfacing Top Course	70	CY	60	4,200
11	Shoring or Extra Excavation Class B	1	LUMP SUM	5,000	5,000
12	Surveying	1	LUMP SUM	2,000	2,000
	Subtotal				*$450,600*
	Sales Tax at 8%				$36,048
	Subtotal				*$486,648*
	Contingency at 20%				$97,330
	Total Estimated Construction Cost				*$583,978*
	Engineering & Administration Costs at 25%				$145,994
	Total Estimated Project Cost				**$729,972**

Preliminary Project Cost Estimate
D-1 SR 506 West of Olequa Creek Water Main Replacement

#	ITEM	QUANTITY	UNIT	UNIT COST ($)	AMOUNT ($)
1	Mobilization, Cleanup and Demobilization	1	LUMP SUM	7,000	7,000
2	Connection to Existing Water Main and Abandon Existing Water System in Place	1	EACH	3,000	3,000
3	Hydrant Assembly	1	EACH	6,000	6,000
4	Service Connection 1 In. Diam.	5	EACH	1,200	6,000
5	Boring Under SR 506	2	EACH	15,000	30,000
6	PVC Pipe for Water Main 4 In. Diam.	60	LF	25	1,500
7	PVC Pipe for Water Main 6 In. Diam.	20	LF	30	600
8	Crushed Surfacing Base Course	10	CY	60	600
9	Crushed Surfacing Top Course	10	CY	60	600
10	Commercial HMA	5	TON	200	1,000
11	Gate Valve 4 In.	1	EACH	1,000	1,000
12	Gate Valve 6 In.	2	EACH	1,100	2,200
13	Erosion Control	1	LUMP SUM	1,000	1,000
14	Traffic Control	1	LUMP SUM	6,000	6,000
15	Roadway Surveying	1	LUMP SUM	120	120
	Subtotal				*$66,620*
	Sales Tax at 8%				$5,330
	Subtotal				*$71,950*
	Contingency at 20%				$14,390
	Total Estimated Construction Cost				*$86,340*
	Engineering & Administration Costs at 25%				$21,585
	Total Estimated Project Cost				**$107,924**

file: CIP, 2015 WSP.xlsx sheet: D-2

Preliminary Project Cost Estimate
D-2 Firgrove Road, Enchanted Valley Drive South & Horseshoe Bend Water Main Improvements

#	ITEM	QUANTITY	UNIT	UNIT COST ($)	AMOUNT ($)
1	Mobilization, Cleanup and Demobilization	1	LUMP SUM	5,000	5,000
2	Connection to Existing Water Main and Abandon Existing Water System in Place	4	EACH	3,000	12,000
3	Blowoff Assembly	2	EACH	3,000	6,000
3	Service Connection 1 In. Diam.	16	EACH	1,200	19,200
4	PVC Pipe for Water Main 4 In. Diam.	700	LF	25	17,500
5	PVC Pipe for Water Main 6 In. Diam.	1,400	LF	30	42,000
6	Crushed Surfacing Base Course	26	CY	60	1,556
7	Crushed Surfacing Top Course	17	CY	60	1,027
8	Commercial HMA	5	TON	200	1,000
9	Gate Valve 4 In.	1	EACH	1,000	1,000
10	Gate Valve 6 In.	2	EACH	1,100	2,200
11	Erosion Control	1	LUMP SUM	1,400	1,400
12	Traffic Control	1	LUMP SUM	4,200	4,200
13	Controlled Density Fill	10	CY	100	1,000
14	Roadway Surveying	1	LUMP SUM	1,400	1,400

Subtotal	*$116,482*
Sales Tax at 8%	$9,319
Subtotal	*$125,801*
Contingency at 20%	$25,160
Total Estimated Construction Cost	*$150,961*
Engineering & Administration Costs at 25%	$37,740
Total Estimated Project Cost	**$188,701**

file: CIP, 2015 WSP.xlsx

sheet: D-3

Preliminary Project Cost Estimate
D-3 Enchanted Valley Water Main Improvements

#	ITEM	QUANTITY	UNIT	UNIT COST ($)	AMOUNT ($)
1	Mobilization, Cleanup and Demobilization	1	LUMP SUM	10,000	10,000
2	Connection to Existing Water Main and Abandon Existing Water System In Place	7	EACH	3,000	21,000
3	Service Connection 1 In. Diam.	61	EACH	1,200	73,200
4	Boring Under SR 506 and SR 411	2	EACH	15,000	30,000
5	PVC Pipe for Water Main 6 In. Diam.	1,300	LF	30	39,000
6	PVC Pipe for Water Main 8 In. Diam.	6,150	LF	35	215,250
7	Crushed Surfacing Base Course	138	CY	60	8,278
8	Crushed Surfacing Top Course	91	CY	60	5,463
9	Commercial HMA	15	TON	200	3,000
10	Gate Valve 6 In.	4	EACH	1,100	4,400
11	Gate Valve 8 In.	13	EACH	1,200	15,600
12	Erosion Control	1	LUMP SUM	7,450	7,450
13	Traffic Control	1	LUMP SUM	14,900	14,900
14	Controlled Density Fill	5	CY	100	500
15	Roadway Surveying	1	LUMP SUM	7,450	7,450
	Subtotal				*$455,491*
	Sales Tax at 8%				$36,439
	Subtotal				*$491,930*
	Contingency at 20%				$98,386
	Total Estimated Construction Cost				*$590,316*
	Engineering & Administration Costs at 25%				$147,579
	Total Estimated Project Cost				**$737,896**

file: CIP, 2015 WSP.xlsx sheet: D-4

Preliminary Project Cost Estimate
D-4 8th Street Water Main Replacement

#	ITEM	QUANTITY	UNIT	UNIT COST ($)	AMOUNT ($)
1	Mobilization, Cleanup and Demobilization	1	LUMP SUM	5,000	5,000
2	Connection to Existing Water Main and Abandon Existing Water System in Place	5	EACH	3,000	15,000
3	Service Connection 1 In. Diam.	11	EACH	1,200	13,200
4	PVC Pipe for Water Main 8 In. Diam.	2,300	LF	35	80,500
5	Crushed Surfacing Base Course	43	CY	60	2,556
6	Crushed Surfacing Top Course	28	CY	60	1,687
7	Commercial HMA	15	TON	200	3,000
8	Gate Valve 8 In.	10	EACH	1,200	12,000
9	Erosion Control	1	LUMP SUM	2,300	2,300
10	Traffic Control	1	LUMP SUM	4,600	4,600
11	Controlled Density Fill	10	CY	100	1,000
12	Roadway Surveying	1	LUMP SUM	2,300	2,300
	Subtotal				*$143,142*
	Sales Tax at 8%				$11,451
	Subtotal				*$154,594*
	Contingency at 20%				$30,919
	Total Estimated Construction Cost				*$185,512*
	Engineering & Administration Costs at 25%				$46,378
	Total Estimated Project Cost				**$231,890**

Preliminary Project Cost Estimate
D-5 7th Street Water Main Replacement

#	ITEM	QUANTITY	UNIT	UNIT COST ($)	AMOUNT ($)
1	Mobilization, Cleanup and Demobilization	1	LUMP SUM	7,000	7,000
2	Connection to Existing Water Main and Abandon Existing Water System In Place	10	EACH	3,000	30,000
3	Blowoff Assembly	2	EACH	3,000	6,000
3	Service Connection 1 In. Diam.	22	EACH	1,200	26,400
4	Boring Under SR 506	1	EACH	15,000	15,000
5	PVC Pipe for Water Main 8 In. Diam.	5,400	LF	35	189,000
6	Crushed Surfacing Base Course	100	CY	60	6,000
7	Crushed Surfacing Top Course	66	CY	60	3,960
8	Commercial HMA	-	TON	200	-
9	Gate Valve 8 In.	18	EACH	1,200	21,600
10	Erosion Control	1	LUMP SUM	2,700	2,700
11	Traffic Control	1	LUMP SUM	8,100	8,100
12	Controlled Density Fill	-	CY	100	-
13	Roadway Surveying	1	LUMP SUM	5,400	5,400
	Subtotal				*$321,160*
	Sales Tax at 8%				$25,693
	Subtotal				*$346,853*
	Contingency at 20%				$69,371
	Total Estimated Construction Cost				*$416,223*
	Engineering & Administration Costs at 25%				$104,056
	Total Estimated Project Cost				**$520,279**

file: CIP, 2015 WSP.xlsx sheet: D-6

Preliminary Project Cost Estimate
D-6 9th Street and C Street Water Main Replacements

#	ITEM	QUANTITY	UNIT	UNIT COST ($)	AMOUNT ($)
1	Mobilization, Cleanup and Demobilization	1	LUMP SUM	5,000	5,000
2	Connection to Existing Water Main and Abandon Existing Water System in Place	5	EACH	3,000	15,000
3	Blowoff Assembly	1	EACH	3,000	3,000
3	Service Connection 1 in. Diam.	11	EACH	1,200	13,200
4	PVC Pipe for Water Main 8 in. Diam.	1,250	LF	35	43,750
5	Crushed Surfacing Base Course	23	CY	60	1,389
6	Crushed Surfacing Top Course	15	CY	60	917
7	Commercial HMA	-	TON	200	-
8	Gate Valve 8 in.	6	EACH	1,200	7,200
9	Erosion Control	1	LUMP SUM	1,250	1,250
10	Traffic Control	1	LUMP SUM	2,500	2,500
11	Controlled Density Fill	-	CY	100	-
12	Roadway Surveying	1	LUMP SUM	1,250	1,250
	Subtotal				*$94,456*
	Sales Tax at 8%				$7,556
	Subtotal				*$102,012*
	Contingency at 20%				$20,402
	Total Estimated Construction Cost				*$122,414*
	Engineering & Administration Costs at 25%				$30,604
	Total Estimated Project Cost				**$153,018**

Preliminary Project Cost Estimate
D-7 Annonen Road Water Main Improvement

#	ITEM	QUANTITY	UNIT	UNIT COST ($)	AMOUNT ($)
1	Mobilization, Cleanup and Demobilization	1	LUMP SUM	5,000	5,000
2	Connection to Existing Water Main and Abandon Existing Water System In Place	1	EACH	3,000	3,000
3	Blowoff Assembly	1	EACH	3,000	3,000
3	Service Connection 1 In. Diam.	4	EACH	1,200	4,800
4	PVC Pipe for Water Main 4 In. Diam.	1,100	LF	25	27,500
5	Crushed Surfacing Base Course	20.37	CY	60	1,222
6	Crushed Surfacing Top Course	13.44	CY	60	807
7	Commercial HMA	5	TON	200	1,000
8	Gate Valve 4 In.	1	EACH	1,000	1,000
9	Erosion Control	1	LUMP SUM	1,100	1,100
10	Traffic Control	1	LUMP SUM	3,300	3,300
11	Controlled Density Fill	10	CY	100	1,000
12	Roadway Surveying	1	LUMP SUM	1,100	1,100
	Subtotal				*$53,829*
	Sales Tax at 8%				$4,306
	Subtotal				*$58,135*
	Contingency at 20%				$11,627
	Total Estimated Construction Cost				*$69,762*
	Engineering & Administration Costs at 25%				$17,441
	Total Estimated Project Cost				**$87,203**

file: CIP, 2015 WSP.xlsx sheet: D-8

Preliminary Project Cost Estimate
D-8. D and E Streets Loop

#	ITEM	QUANTITY	UNIT	UNIT COST ($)	AMOUNT ($)
1	Mobilization, Cleanup and Demobilization	1	LUMP SUM	5,000	5,000
2	Connection to Existing Water Main and Abandon Existing Water System in Place	2	EACH	3,000	6,000
3	Blowoff Assembly	-	EACH	3,000	-
3	Service Connection 1 In. Diam.	9	EACH	1,200	10,800
4	PVC Pipe for Water Main 8 In. Diam.	1,300	LF	35	45,500
5	Crushed Surfacing Base Course	24.07	CY	60	1,444
6	Crushed Surfacing Top Course	15.89	CY	60	953
7	Commercial HMA	-	TON	200	-
8	Gate Valve 8 In.	2	EACH	1,200	2,400
9	Erosion Control	1	LUMP SUM	1,300	1,300
10	Traffic Control	1	LUMP SUM	3,900	3,900
11	Controlled Density Fill	-	CY	100	-
12	Roadway Surveying	1	LUMP SUM	1,300	1,300
	Subtotal				*$78,598*
	Sales Tax at 8%				$6,288
	Subtotal				*$84,886*
	Contingency at 20%				$16,977
	Total Estimated Construction Cost				*$101,863*
	Engineering & Administration Costs at 25%				$25,466
	Total Estimated Project Cost				**$127,328**

file: CIP, 2015 WSP.xlsx sheet: D-9

Preliminary Project Cost Estimate
D-9 Customer Shutoff Valves

#	ITEM	QUANTITY	UNIT	UNIT COST	AMOUNT
1	Mobilization, Cleanup and Demobilization	1	LUMP SUM	7,000	7,000
2	Service Connection 1 in. Diam.	280	EACH	300	84,000
3	Crushed Surfacing Base Course	10	CY	60	600
4	Crushed Surfacing Top Course	10	CY	60	600
5	Erosion Control	1	LUMP SUM	1,000	1,000
6	Traffic Control	1	LUMP SUM	2,000	2,000
	Subtotal				*$95,200*
	Sales Tax at 8%				$7,616
	Subtotal				*$102,816*
	Contingency at 20%				$20,563
	Total Estimated Construction Cost				*$123,379*
	Engineering & Administration Costs at 25%				$30,845
	Total Estimated Project Cost				**$154,224**

file: CIP, 2015 WSP.xlsx sheet: D-11

Preliminary Project Cost Estimate
D-11 Pressure Reducing Valve Stations

#	ITEM	QUANTITY	UNIT	UNIT COST	AMOUNT
1	Mobilization, Cleanup and Demobilization	1	LUMP SUM	500	500
2	Pressure Reducing Valve Assemblies	2	EACH	2500	5,000
3	Vault	2	EACH	1000	2,000
3	Crushed Surfacing Base Course	10	CY	60	600
4	Crushed Surfacing Top Course	10	CY	60	600
5	Erosion Control	1	LUMP SUM	1,000	1,000
6	Traffic Control	1	LUMP SUM	2,000	2,000
	Subtotal				*$11,700*
	Sales Tax at 8%				$936
	Subtotal				*$12,636*
	Contingency at 20%				$2,527
	Total Estimated Construction Cost				*$15,163*
	Engineering & Administration Costs at 25%				$3,791
	Total Estimated Project Cost				**$18,954**

file: CIP, 2015 WSP.xlsx sheet: TR projects

Preliminary Project Cost Estimate
TR Treatment Energy Improvement Projects

#	ITEM	QUANTITY	UNIT	UNIT COST	AMOUNT
TR-1	Turbidmeters	1	LUMP SUM	3000	$3,000
TR-2	Chartless Recorders	1	LUMP SUM	6500	$6,500
TR-3	Comprehensive Electrical Survey	1	LUMP SUM	10000	$10,000
TR-4	On-line Analyzer (temperature,pH, chlorine residual)	1	LUMP SUM	6500	$6,500
TR-5	PLC	1	LUMP SUM	20000	$20,000
TR-6	Leak Detection Survey	1	LUMP SUM	4000	$4,000
TR-7	Energy Audits	1	LUMP SUM	4000	$4,000

CROSS CONNECTION CONTROL PROGRAM

For the

Vader-Enchanted Valley Water System

Purpose

A cross-connection is any physical arrangement where the potable water supply is connected, directly or indirectly, to any liquid of unknown or unsafe quality. This includes any liquids that may contaminate the public water supply through backflow or reverse flow.

Under WAC 246-290-490, Cross-Connection Control, utilities have the responsibility to protect the water user from contamination due to cross connections. The regulation also requires utilities to develop and implement a comprehensive program to control cross connections within the system. The purpose of the program is to protect the health of water consumers and the potability of the public water system by assuring:

- Inspection and regulation of plumbing in existing and proposed piping networks.
- Proper installation and surveillance of backflow prevention assemblies when actual or potential cross connections exist and cannot be regulated.

WAC 246-290-490 mandates a cross-connection control program (CCCP) for the purposes of establishing:

- Minimum cross-connection control operating policies
- Backflow prevention assembly installation practices
- Backflow prevention assembly testing procedures
- Enforcement authority.

Guidance

The CCCP is developed to comply with WAC 246-290-490 and the recommended guidance:

- Manual of Cross-Connection Control published by the Foundation for Cross-Connection Control and Hydraulic Research, University of Southern CA (USC Manual).
- Cross-Connection Control Manual, Accepted Procedure and Practice published by the Pacific Northwest Section of the American Water Works Association (PNWS-AWWA Manual).
- Cross-Connection Control for Small Water Systems by DOH.

Definitions

Unless otherwise defined, all CCC related terms used in this program have the same definitions as those contained in WAC 246-290-010.

"Customer" shall mean any person, firm, or corporation obtaining or using water service from the water system of the utility.

"Department" shall mean the State Department of Health (DOH).

"Public Works" shall mean the department of public works of Lewis County.

Program Elements

Specific issues have to be in an effective CCCP. WAC 246-290-490 outlines ten minimum elements to be in a CCCP.

Element 1: Legal Authority

The CCCP is outlined in this chapter and will be adopted with the approval of the Water System Plan (WSP) or singly by the county commissioners. Title 13 of the Lewis County Code (LCC) lays out policies for:

- Violations and appeals (13.20.060 LCC)
- Application, review and approval (13.30.100 LCC)
- Violation of utility regulations (13.30.120 LCC)
- Required inspections (13.30.400 LCC)
- Right-of-entry (13.30.410 LCC)
- Correction of unsafe conditions (13.30.500)
- Conditions of utility service (13.80.100 LCC).
- Backflow Prevention Requirements (13.80.100(6)).

These policies provide authorization to implement the current cross-connection control program. Title 13 LCC is available at www.lewiscountywa.gov. A code amendment is planned at the end of 2014 which will further strengthen authorization to enact programs consistent with WSPs of county owned utilities.

Element 2: Hazard Assessment

Three existing cross-connection assemblies were identified in the 2008 WSP. These locations were: city wastewater treatment plant (WWTP), water treatment plant and the local Little Crane Restaurant. The latter two locations were addressed in March 2011: there is an air gap in the water plant and the soda machine at the local eatery uses bottled water. The backflow assembly at the local WWTP was deemed antiquated in July 2011. The City of Vader constructed a new backflow assembly and hot box in January 2013.

A water use questionnaire was distributed to customers in December 2013, and all new customers have to complete a water use questionnaire along with an application of service. Lewis County requires all new building development in the service area to have a completed Public Water Availability Notification form. This form shows that we are capable of providing water service to the proposed project site. As part of the approval process, the utility asks for a

completed water service application and water use questionnaire. If any backflow prevention assemblies are required, it is noted on our database and county land development permitting database, and required to be complete before occupancy.

Element 3: Control

Additional control measures were taken by installing backflow assemblies adjacent to the service meters for the local WWTP in 2011 and fire district in 2012. All new commercial service connections are required to install backflow assemblies as a condition of water service. Utility personnel use the current WSDOH approved list of backflow assemblies available at the WSDOH website.

Meter setters for residential customers generally have a check valve, and these types are used as we perform repairs on service lines. As resources allow, we would like to construct customer shutoff valves and replace meter setters to have additional layers of protection. When possible in repairing a customer line, we install a customer shutoff valve.

Element 4: CCS Personnel

Operations personnel performed CCS program tasks when the system was managed by the City of Vader. Training has been approved and CCS certification is encouraged for current operation personnel. We currently use a contract CCS specialist.

Element 5: Inspection

We notify customers of upcoming test and completion dates.

Element 6: Quality Control Testing Program

Testing is performed by the customer. Our notification letter includes guidance to use BAT certified contractors.

Element 7: Backflow Incident Response

In the event a backflow incident occurs due to human error, main break or power outage, we will follow procedures similar to a water main break as outlined in our SOP Manual. The following steps will be taken when a backflow incident has occurred, and steps may be done concurrently depending upon the situation.

- Report incident and request assistance to the Administrator and supervisor.
- Assess situation.
- Investigate and find the source of the contamination.
- Depending upon the severity of the contamination, contact WSDOH.
- Isolate the contamination by closing valves but leave one valve open to maintain pressure in the isolated segment.
- Public Works will ask for CodeRED to be issued to customers about the incident and to not use water.
- Find the source of the contamination, discontinue service to that customer and notify customer to complete corrective action.
- If appropriate, refer customers that may have consumed the contaminant or had their plumbing system contaminated to Lewis County Health, Building Division of the Lewis County Community Development Dept., and City of Vader.

- Formulate plan to clean the contaminated system consistent with the identified contaminant(s).
- Flush portions of the affected system.
- Disinfect the flushed portions of the system.
- Notify customers of completion by issuing another CodeRED or door-to-door notice.

Most chemical or physical contaminants can be flushed from the system or customer's plumbing system with adequate flushing velocity. At times, flushing may not be adequate in systems where scale and corrosion deposits (e.g., tuberculation on old cast iron mains) provide a restriction to get adequate flushing velocity, or where chemical deposits or bacteriological slimes (biofilm) are present.

In these situations, other methods such as a foam swab (pig) or alteration of the chemical contaminant may be needed. An example of the latter method could be alteration through oxidation by using chlorination or addition of detergents.

To disinfect water mains using the "slug" or "continuous flow" method, a field unit should be used for chlorine injection. The field unit can be a chemical feed metering or proportioning pump for sodium hypochlorite.

When adding any chemical, including chlorine, to remove a contaminant from the system, it is important that the chemistry of the contaminant is understood. Adding the wrong chemical could make the contaminant more toxic or more difficult to remove from the distribution main.

It is advised to contact the regional DOH office to discuss the proposed methods for contaminant removal and disinfection prior to taking corrective action.

Element 8: Public Education

Information about cross-connection control is provided to our customers in newsletter and the latest water use questionnaire (December 2013).

Element 9: Records

A master list is kept and the new utility billing software has fields to record the information for the service address.

Element 10: Reclaimed Water Requirements

We do not distribute or have facilities that receive reclaimed water.

LEWIS COUNTY
Washington's First County
est. 1845

Lewis County Department of Public Works

Timothy R. Elsea, PE, Director / County Engineer
Tim D. Fife, PE, Assistant County Engineer

October 12, 2015

Mayor Ken Smith
City of Vader
PO Box 189
Vader, WA 98593

Re: Backflow Assembly Test Notice for Vader WWTP

Dear Mayor Smith,

According to our records, the backflow prevention assembly listed below is due for testing. The last test was conducted in November 2014 and the test should be done annually.

The test must be done by a backflow assembly tester certified to test assemblies in your area. Please refer to the referenced website for a directory of certified testers in good standing at http://www.doh.wa.gov/CommunityandEnvironment/DrinkingWater/RegulationandCompliance/WaterworksOperatorCertification.

SERIAL #	LOCATION
385576	In hot box, next to chlorine building

The tester should forward a copy of the completed test report to Lewis County Public Works and provide the City with a copy. Please ensure that the test is completed by the end of December 2015.

Thank you for working with us to protect our drinking water. If you have questions, please contact our office.

Sincerely,

Shirley Kook, PE
Acting Utility Services Manager

Road Maintenance & Traffic
476 West Main St.
Chehalis, WA 98532
O 360.740.3380
F 360.740.2741
Erik Martin, PE, Manager

Administration, Engineering, Utilities & Real Estate Services
2025 NE Kresky Ave.
Chehalis, WA 98532
O 360.740.1123
F 360.740.1479

Solid Waste Services
Post Office Box 180
Centralia, WA 98531
O 360.740.1451
F 360.330.7805
Steve Skinner, Manager

Customer Account #_____

WATER USE QUESTIONNAIRE

Please indicate whether the special plumbing or activities listed below apply to your premises.

YES	NO	PLUMBING or ACTIVITY TYPE
		Underground (buried) sprinkler system
		Water treatment system (example: water softener, filter)
		Solar heating system
		Fire sprinkler system
		Other water supply systems (whether or not connected to plumbing system)
		Sewage pumping facilities or grey water system
		Hobby farm
		Animal watering troughs
		Swimming pool or spa
		Greenhouses, hydroponics
		Decorative pond
		Photo lab or dark room
		Dialysis or medical equipment
		Home-based business. If yes, please describe (e.g., beauty salon, machine shop, etc.) _____ _____ _____

Completed by (print name):_____

Address (of water service):_____

Phone Number (optional):_____

Customer's Signature:_____Date:_____

Thank you for your cooperation!

Please Return to: Lewis County Public Works, 2025 NE Kresky Ave, Chehalis, WA 98532

What is a Cross Connection?

A cross connection is a point in a plumbing system where the potable water supply is connected to a non-potable source. Briefly, a cross connection exists whenever the drinking water system is or could be connected to any non-potable source (plumbing fixture, equipment used in any plumbing system). Pollutants or contaminants can enter the safe drinking water system through uncontrolled cross connections when backflow occurs.

Backflow is the unwanted flow of non-potable substances back into the consumer's plumbing system and/or public water system (i.e., drinking water).

There are two types of backflow: ***backsiphonage*** and ***backpressure***. ***Backsiphonage*** is caused by a negative pressure in the supply line to a facility or plumbing fixture. Backsiphonage may occur during waterline breaks, when repairs are made to the waterlines, when shutting off the water supply, etc.

Backpressure can occur when the potable water supply is connected to another system operated at a higher pressure or has the ability to create pressure. Principal causes are booster pumps, pressure vessels and elevated plumbing.

Backflow preventers are mechanical devices designed to prevent backflow through cross connections. However, for backflow preventers to protect as designed, they must meet stringent installation requirements.

For further information contact your local water purveyor or the PNWS/AWWA Cross-Connection Control Committee through the PNWS office at (877) 767-2992 or on the web at www.pnws-awwa.org

© 2003 R06/03 [Brochure #2]

Cross Connections can create Health Hazards

Drinking water systems may become ***Polluted*** *or* ***Contaminated*** *through uncontrolled cross connections*

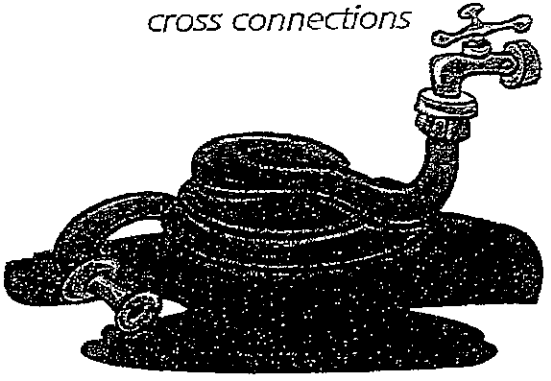

American Water Works Association
Pacific Northwest Section

Why Be Concerned?

Most water systems in the United States and Canada have good sources of water and/or sophisticated treatment plants to convert impure water to meet drinking water standards. Millions of dollars are spent to make the water potable before it enters the distribution system so most water purveyors think that their supplies are not in jeopardy from this point on. Studies have proven this to be wrong. Drinking water systems may become polluted or contaminated in the distribution system through uncontrolled cross connections.

Cross connections are installed each day in the United States because people are unaware of the problems they can create. Death, illness, contaminated food products, industrial and chemical products rendered useless are some of the consequences of such connections. As a result, many hours and dollars are lost due to ***cross connections.***

Wrong:
Uncontrolled Cross Connection

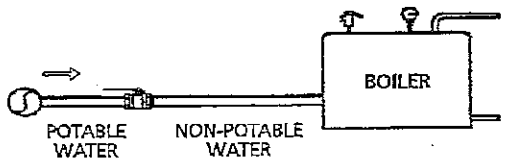

Right:
Controlled Cross Connection

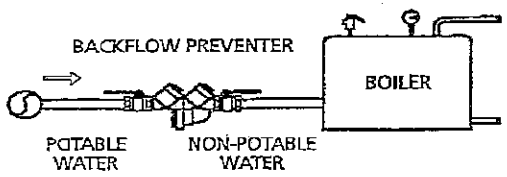

Where are Cross Connections Found?

Cross connections are found in all plumbing systems. It is important that each cross connection be identified and evaluated as to the type of backflow protection required to protect the drinking water supply. Some plumbing fixtures have built-in backflow protection in the form of a physical air gap. However, most cross connections will need to be controlled through the installation of an approved mechanical backflow prevention device or assembly. Some common cross connections found in plumbing and water systems include:

1. Wash basins and service sinks.
2. Hose bibs.
3. Irrigation sprinkler systems.
4. Auxiliary water supplies.
5. Laboratory and aspirator equipment.
6. Photo developing equipment.
7. Processing tanks.
8. Boilers.
9. Water recirculating systems.
10. Swimming pools.
11. Solar heat systems.
12. Fire sprinkler systems.

Every water system has cross connections. Plumbing codes and State drinking water regulations require cross connections to be controlled by approved methods (physical air gap) or approved mechanical backflow prevention devices or assemblies. The various types of mechanical backflow preventers include: reduced pressure backflow assembly (RPBA), reduced pressure detector assembly (RPDA), double check valve assembly (DCVA), double check detector assembly (DCDA), pressure vacuum breaker assembly (PVBA), spill resistant vacuum breaker assembly (SVBA) and atmospheric vacuum breaker (AVB).

For a backflow preventer to provide proper protection, it must be approved for backflow protection, designed for the degree of hazard and backflow it is controlling, installed correctly, tested annually by a State certified tester, and repaired as necessary. Some states require mandatory backflow protection on certain facilities where high health-hazard-type cross connections are normally found. The following is a partial list of those facilities:

1. Hospitals, mortuaries, clinics.
2. Laboratories.
3. Food and beverage processing centers.
4. Metal plating and chemical plants.
5. Car washes.
6. Petroleum processing and storage plants.
7. Piers and docks.
8. Sewage treatment plants.

What to Do?

[illegible]

Washington
Department of Health
[illegible]
[illegible]
[illegible]

Oregon
Oregon Health Division
[illegible]
[illegible]
[illegible]

British Columbia, Canada
BC Water & Waste Association
[illegible]
[illegible]
[illegible]

Idaho
Idaho Division of Environment
[illegible]
[illegible]
[illegible]

[illegible]

APPENDIX I

Water Shortage Response Plan

LEWIS COUNTY

DEPARTMENT OF PUBLIC WORKS

UTILITY DIVISION

VADER – ENCHANTED VALLEY WATER SYSTEM

WATER SHORTAGE RESPONSE PLAN

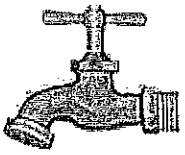

MAY 2015

Table of Contents

INTRODUCTION 3
Development 3
CHAPTER 1 – EVENTS THAT CAUSE WATER SHORTAGES 4
Emergency Categories 4
LEVEL 1 – NORMAL/ROUTINE EMERGENCY 4
LEVEL 2 – MINOR/ALERT EMERGENCY 4
LEVEL 3 – SIGNIFICANT EMERGENCY 4
LEVEL 4 – CATASTROPHIC DISASTER/MAJOR EMERGENCY 4
Water Shortage Events 5
CHAPTER 2 – EVALUATE SUPPLY AND DEMAND 6
Supply Source 6
Consumption Demand 6
Comparison 6
CHAPTER 3 – DEFININGS STAGES AND CRITERIA OF A WATER SHORTAGE 7
CHAPTER 4 – ALTERNATE WATER SOURCES 8
CHAPTER 5 – EFFECTIVE COMMUNICATION 9
CHAPTER 6 – DEMAND REDUCTION ALTERNATIVES 9
CHAPTER 7 – WATER SHORTAGE RESPONSE ACTIONS 10

INTRODUCTION

Water shortages can occur for a variety of reasons, including: natural disasters, extreme customer usage, equipment failures, leakage and inadequate source water. Our response will be dependent upon each type of and scope of the water shortage situation. For example, the scope may be system wide or localized.

Development

Water shortage situations arising out of a natural disaster and inadequate source water will involve the Lewis County Board of County Commissioners (BOCC) and other county offices. In the event of a large natural disaster, the BOCC will approve a declaration and designate the official FEMA disaster relief agent for the county, which is done annually. Lewis County has a countywide emergency management plan which outlines coordination efforts among county departments and offices. In the event of county emergencies, the efforts are headed by the Lewis County Sheriff Office , Division of Emergency Management (Emergency Management).

Despite the comprehensive county management and responses to a natural hazard, the water utility must continue or resume water service operations to provide safe and reliable drinking water. Development of the water shortage response plan is a process to help minimize or avoid water shortages during unusual events. This is the aim of the water shortage response plan.

The water shortage response plan is laid out in seven chapters following the guidance document by the State Department of Health (DOH), "Water Shortage Response Plans for Small Public Drinking Water Systems, October 2008, #331-316".

ABBREVIATIONS

BOCC	Board of County Commissioners
DOH	Washington State Department of Health
FEMA	Federal Emergency Management Agency
LCC	Lewis County Code
WSP	"Water System Plan for Vader-Enchanted Valley Water System" developed by Lewis County, 2015.

CHAPTER 1 – EVENTS THAT CAUSE WATER SHORTAGES

Emergency Categories

To aid in responding to events that can cause water shortages, a description of four categories of emergencies is provided. The categories are outlined in DOH publication #331-211, "Emergency Response Planning Guide for Public Water Systems, May 2003".

LEVEL 1 – NORMAL/ROUTINE EMERGENCY

These situations are defined as ones that: can be resolved within 24 hours, will not jeopardize public health, or can be handled normally by utility personnel. Examples are:

- Service and customer line breaks.
- Short power outages.
- Minor mechanical problems in Intake and Plant.

LEVEL 2 – MINOR/ALERT EMERGENCY

These situations are defined as ones that: can cause minor disruption in supply, pose possible contamination to the point of coordination with DOH or issuance of a health advisory to customers, or will take up to 72 hours to resolve. Examples are:

- Disruption in supply such as a transmission line break or pump failure with a potential for backflow and loss of pressure.
- Inadequate storage to handle disruption in supply.
- An initial positive coliform or E. coli sample.
- An initial primary chemical contaminant sample.
- A minor act of vandalism.
- Noticeable and continuing decline of water supply.

LEVEL 3 – SIGNIFICANT EMERGENCY

These situations are defined as ones that: have significant mechanical or contamination problems that will disrupt water delivery to customers to the point of issuing a health advisory, or may need more than 72 hours to resolve. Examples are:

- A verified acute confirmed coliform MCL or E. coli/fecal positive sample requiring an immediate health advisory to customers.
- A confirmed sample of another primary contaminant requiring an immediate health advisory to customers.
- A loss or complete malfunction of the water treatment facilities for the surface water source, including chlorination.
- A major main break or system failure resulting in a water shortage or system shutdown.
- Vandalism or threat such as intrusion or damage to a system facility.
- An immediate threat to the public health of the customers and an advisory is required.

LEVEL 4 – CATASTROPHIC DISASTER/MAJOR EMERGENCY

These situations are defined as ones that: experience damage from major damage or contamination from a natural disaster, an accident or malicious act of intent; require immediate notification of law enforcement and local emergency management services; immediate issuance of health advisories and emergency declarations to protect public health; or take several days to weeks to resolve. Examples are:

- Hazards identified in Chapter 8, WSP.
- Contamination of water supply or system with biological or chemical agents.
- Spills or contaminant entry within 2,000 ft of the water source.

Water Shortage Events

The next step in this chapter was to identify the types of events that can cause water shortages by either at the source, treatment and distribution system. These are presented in Table 1 according to their respective category of emergency. Emergencies that fall under Levels 1 and 2 are not included as these are determined to be resolved within 24 hours and up to 72 hours, respectively. The probability of occurrence or risk for each event is given as high, medium or low (H, M, L). The probability of occurrence is based on past occurrences or likelihood as identified in "Lewis County Multi-Jurisdictional Hazard Mitigation Plan" adopted on July 26, 2010. Each event is also rated as either an immediate (I) or anticipated (A) impact to water shortage. The "potential effects on facility types" are provided in Table 1 (columns 4 to 9) to help determine the risk and impact type. Refer to the WSP for a description and response action for each hazard.

TABLE 1 – WATER SHORTAGE CAUSING EVENTS

			POTENTIAL EFFECTS ON FACILITY TYPES:					
EMERGENCY LEVEL	RISK	IMPACT TYPE	SUPPLY SOURCE	INTAKE	PLANT	STORAGE	DISTRIB. SYSTEM	POWER SUPPLY
LEVEL 3								
Water Main Break	H	I					X	
Vandalism	L	I		X	X	X	X	X
LEVEL 4								
Dam Failure	M	I	X	X				
Debris Flow	M	A	X	X				
Drought	M	A	X					
Earthquake	H,M	I	X	X	X	X	X	X
Extreme Heat	M	A				X		X
Flooding	H	A	X	X	X			
Hailstorm	L	A						X
Ice/Snow Storm	L	I		X	X	X	X	X
Severe Windstorm	M	A		X	X			X
Volcanic Eruption	L	I	X	X	X			X
Wildfire	H,M	I	X	X	X			X

CHAPTER 2 – EVALUATE SUPPLY AND DEMAND

Supply Source

The supply source is the Cowlitz River. The information is presented in Table 2.

TABLE 2 – WATER RIGHTS SUMMARY				
		Instantaneous Withdrawal		
Source	Certificate	Water Right (gpm)	Existing Capacity (gpm)	Surplus (+) or Deficit (-) (gpm)
Cowlitz River	9616	224	200 (=288,000 gpd)	24

Consumption Demand

Consumption is presented in Table 3 which was developed for the WSP.

TABLE 3 – WATER DEMAND FORECAST												
	BASE (2014)				6-YEAR (2020)				20-YEAR (2034)			
		DEMAND (gpd)				DEMAND (gpd)				DEMAND (gpd)		
WATER USE CATEGORY	#ERU	ADD	MDD	PHD	#ERU	ADD	MDD	PHD	#ERU	ADD	MDD	PHD
Residential	344	39,908	55,871	-	370	42,869	60,018	-	437	50,660	70,924	-
Commercial	18	2,088	2,923	-	19	2,249	3,149	-	24	2,771	3,879	-
Industrial	0	0	0	-	0	0	0	-	0	0	0	-
Other	15	1,740	2,436	-	15	1,741	2,436	-	15	1,744	2,442	-
Subtotal	377	43,736	61,230	-	404	46,859	65,603	-	476	55,175	77,245	-
Non-Revenue Water	90	10,497	14,696	-	97	11,246	15,745	-	114	13,242	18,539	-
TOTAL DEMAND WITHOUT CONSERVATION	**468**	**54,232**	**75,925**	**127 gpm**	**501**	**58,106**	**81,348**	**134 gpm**	**590**	**68,417**	**95,784**	**150 gpm**
Conservation	N/A	N/A	N/A	N/A	-32	-3,706	-4,817	-	-40	-4,564	-5,933	-
TOTAL DEMAND WITH CONSERVATION	**446**	**51,758**	**72,461**	**123 gpm**	**478**	**55,448**	**77,627**	**129 gpm**	**563**	**65,276**	**91,387**	**145 gpm**

ERU = 116 gpd/residential customer

Comparison

A comparison of the supply and consumption information is presented in Table 4.

TABLE 4 – SUPPLY AND DEMAND COMPARISON	
QUESTIONS	YES/NO
Can the source and pumping capability meet average day demand?	Yes
Can the source and pumping capability meet peak day demands?	Yes
Is there more than normal or significant drawdown in the storage reservoir during times of average and/or peak day demand?	No
Does consumption ever exceed the supply resulting in water shortage problems?	No
Think about if the supply were reduced by 10%, 20% and 30%. Where is the point at which demand could not be met?	80% of 2014, 76% of 2034
Is it likely the water system will experience a water shortage? If yes, do you consider the magnitude of the shortage severe, moderate or minor?	No

CHAPTER 3 – DEFININGS STAGES AND CRITERIA OF A WATER SHORTAGE

Stages and criteria are in Section 13.30.700 Lewis County Code (LCC).

13.30.700 Water conservation program. The utility division may develop and administer any programs necessary to further water conservation or to comply with water conservation requirements of any local, state or federal agency having jurisdiction within the utility service area. [Ord. 1215 §3 (Att. A), 2010]

A Level I water supply problem may be declared at the discretion of the administrator. Voluntary water conservation measures may be requested by notice and education of the customers about "nonessential uses" as defined in this section and in the water shortage response plan for the respective utility.

A Level II water supply problem may be declared by the administrator when water usage exceeds the rate of resupply. Voluntary water conservation measures will be used including reduced or altered outdoor watering schedules.

A Level III water supply problem will be declared by the Board when water supply fails to meet the demand for water and voluntary conservation measures are ineffective or expected to be inadequate. No outdoor watering except as authorized by the administrator, no potable water shall waste in any drainage way, and no nonessential uses are allowed.

The following water uses are considered nonessential water uses during Level III emergencies: washing of any motorbike, motor vehicle, boat, trailer, airplane or other vehicle except at a commercial self-contained washing facility; hosing of any sidewalks, walkways, driveways, parking lots, tennis courts or other hard surfaced areas, buildings or structures; filling and refilling of any indoor or outdoor swimming and jacuzzi pools except where authorized for neighborhood fire control or as required by a medical doctor's prescription; using water in a fountain or pool for aesthetic purposes except where needed to support fish life; serving water to a customer in a restaurant unless requested by the customer; drawing water from hydrants for construction, fire drills, recreation and non-firefighting purposes; using water for dust control; and irrigating water for recreational fields, golf courses and grounds.

If the administrator determines that any customer failed to comply with the provisions pertaining to a Level III water emergency, then one written warning notice shall be delivered to the customer's residence or posted at the front entrance of the residence. If the customer fails to respond within the stated conditions, the administrator will authorize disconnection of the customer's water service. Service so disconnected shall be restored only upon payment to unlock or turn the meter on, service meter charge and other costs incurred in the discontinuance of service, and assurance that the action causing the discontinuance will not be repeated. Prior to restoration of service, the utility may install a flow restrictive device on the customer's service line. The flow restrictive device will be removed at the expiration of the Level III water emergency and may be removed earlier at the discretion of the administrator.

CHAPTER 4 – ALTERNATE WATER SOURCES

The water system does not have an intertie to an adjacent water supply system or a backup well. It will have to depend on the alternate sources presented in Table 5.

TABLE 5 – ALTERNTE SOURCES OF WATER				
ALTERNATIVE SOURCES	NAMES	CONTACT INFORMATION	AVAILABILITY	SAFE FOR DRINKING?
Bottled water	Home Depot Store #4740 Chehalis, WA	360-748-2102	5-gal, 24 pk of 17 oz bottles.	Yes
"	WalMart	360-748-1240	On stock	Yes
"	Costco	360-357-6580	On stock	Yes
Tanker truck, LCPW	Lewis County Public Works	Public Works Director, 360-740-2697	Depends on source.	No
Tanker truck	Water Buffalo, Inc.	877-278-2669	4000 gal tanker. Depends on source.	Yes
"	City of Chehalis	David Vasilauskas, Water Superintendent, 360-740-748-0238	Per availability or agreement.	Yes
"	City of Centralia	Kahle Jennings, Public Works Director, 360-330-7512	"	Yes
"	City of Napavine	Steve Ashley, Director of Public Works 360-262-9231	"	Yes
"	City of Winlock	360-785-3811	"	Yes
"	City of Toledo	360-864-4564	"	Yes
"	City of Mossyrock	360-983-3300	"	Yes
"	Cowlitz County Public Works, Utilities Division	Brent Sanborn, Utilities Manager 360-577-3030 x6538	"	Yes

CHAPTER 5 - EFFECTIVE COMMUNICATION

The Utility uses the following modes to inform our water service customers: 1) Lewis County CodeRED notification system; 2) newsletters & correspondence; 3) doorhangers; 4) message box in water invoices; 5) Lewis County website; 6) Vader Lion's Club billboard; and 7) notices at public places. The CodeRED system is used to send critical communications to registered customers. The Utility uses CodeRED for repairs, disasters and events that will last longer than 24 hours. Messages are reviewed internally before it is sent to the county 911 system for clarity. The procedure is in our Standard Operating Procedures (SOP) manual.

In the event of an impending water shortage, messages can be conveyed in advance using the above listed modes of communication. Messages will be developed, updated and approved by the utility workgroup or Administrator as an event develops. Some example key water shortage messages are provided below.

- There is a potential for a water shortage this year due to drought conditions. We are taking this seriously and will be communicating with you regularly.
- Our primary concern is protecting our customers' health and the quality of the water being supplied by keeping the water system operational.
- What we know right now is ...
- We ask customers to conserve water by implementing water conservation measures. These measures are provided at...
- The potential exists for a less-than-normal water supply. Customers are advised that wateruse restrictions may become necessary to minimize or avoid water supply problems.
- Please be advised that everyone is required to conserve water in the following ways:...

CHAPTER 6 - DEMAND REDUCTION ALTERNATIVES

Stages and criteria are in Section 13.30.700 LCC. This section of the LCC is in Chapter 3 of this document.

CHAPTER 7 – WATER SHORTAGE RESPONSE ACTIONS

Table 6 summarizes some of the response actions for specific water shortage events that the Utility can take. The criteria for the response action is according to Section 13.30.700 LCC. It is recognized that these suggested actions will be modified by the utility Administrator and the utility workgroup to best address the situation.

TABLE 6 – WATER SHORTAGE RESPONSE ACTIONS

STAGE	CRITERIA	ACTIONS	GENERAL MESSAGE TYPE
I	Low Cowlitz River water levels & forecasts by Tacoma Power	Alerts for voluntary conservation measures	Updates according to Tacoma Power and other forecasters
	Discretion of Administrator	Voluntary conservation measures	We may soon experience less than normal water supplies.
	"	"	Please use water wisely.
II	Low Cowlitz River water levels & forecasts by Tacoma Power	Alerts for voluntary conservation measures	Updates according to Tacoma Power and other forecasters
	Usage exceeds rate of resupply	Voluntary conservation measures	Please use water wisely.
	"	Outdoor watering schedules	Outdoor watering schedules.
III	Water supply is inadequate to meet demand	No outdoor watering except as authorized by Administrator	No outdoor watering, wasting of potable water and nonessential uses.
	Voluntary conservation efforts are ineffective or expected to be inadequate	No wasting of potable water in any drainage way	"
	"	No nonessential uses of potable water	"

APPENDIX J

Standard Operating Procedures

Vader-Enchanted Valley Water System

LEWIS COUNTY

DEPARTMENT OF PUBLIC WORKS

UTILITY DIVISION

VADER – ENCHANTED VALLEY WATER SYSTEM

STANDARD OPERATING PROCEDURES

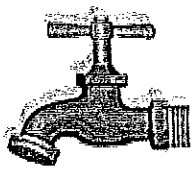

JANUARY 2016

Table of Contents

ABBREVIATIONS AND ACRONYMS 4
INTRODUCTION 5
PERSONNEL 6
WHO DOES WHAT? 6
ALTERNATE COVERAGE 6
OPERATIONAL PROCEDURES 8
DAILY PLANT PROCEDURES 8
PART 1: GETTING STARTED 8
PART 2: PLC SCREEN READINGS 8
PART 3: OTHER PLANT READINGS 9
PART 4: CHEMICALS USED 10
PART 5: LABORATORY PROCEDURES 11
PART 6: MONITORING CLARIFIER PERFORMANCE 12
PART 7: WINDING DOWN 13
MIXING CHEMICALS 15
SODA ASH 15
ALUM (Hydrated Potassium Aluminum Sulfate) 15
POLYMER 16
SODIUM HYPOCHLORITE 16
OPERATOR DUTIES AT THE INTAKE FACILITY 17
SHUTTING DOWN THE PLANT 17
STARTING UP THE PLANT 17
MANUAL PLANT START-UP 17
MANUAL ADSORPTION CLARIFIER FLUSH PROCEDURE 17
MANUAL FILTER BACKWASH PROCEDURE 18
MANUAL ADSORPTION CLARIFIER DE-PLUGGING PROCEDURE 18
TURBIDIMETER 18
REPORTING AND MONITORING 19
MONTHLY REPORTING AND MONITORING 19
ANNUAL REPORTING AND MONITORING 22
TOTAL ORGANIC CONTAMINANTS 22
TTHM and HAA5 22
DELIVERY TO CONTRACT LABORATORY 23
NITRATE 23
LEAD AND COPPER (Pb and Cu) 24
CONSUMER CONFIDENCE REPORT 24
WATER USE EFFICIENCY ANNUAL PERFORMANCE REPORT 24

CALLOUTS AND MAIN BREAKS 25
RESPONDING TO TELEPHONE CALLOUTS 25
PIPE REPAIR PROCEDURE 26
PROGRAMS 29
CROSS-CONNECTION CONTROL PROGRAM 29
SERVICE METERS 29
LEAK DETECTION 29
MAINTENANCE 31
WTP SYSTEM MAINTENANCE 31
CLEARWELL MAINTENANCE 31
STORAGE RESERVOIR MAINTENANCE 31
INTAKE STRUCTURE MAINTENANCE 32
WTP FACILITY & GROUNDS MAINTENANCE 32
VEHICLE MAINTENANCE 33
SERVICE CONNECTIONS MAINTENANCE 33
ADMINISTRATION 35
CUSTOMER ACCOUNT 35
WATER USAGE FROM FIRE PROTECTION FACILITIES 39
WAIVER OF FEES 40
HIGH WATER USAGE COMPLAINTS 41
LOW-INCOME SENIOR and TOTALLY DISABLED RATE APPLICATIONS 42
COLLECTIONS 43
PROPERTY LIEN (While in receivership) 45
Utility Notification Center Locates 47
SEARCHING FOR LOCATES: ..... **Error! Bookmark not defined.**
APPENDICES 48
APPENDIX A – Daily Monitoring Forms and Instructions 50
APPENDIX B - Manual Plant Start-Up Procedure 54
APPENDIX C - Manual Adsorption Clarifier Flush Procedure 56
APPENDIX D - Manual Filter Backwash Procedure 57
APPENDIX F – Monthly Reporting and Monitoring Forms 60
APPENDIX G – Annual Reporting and Monitoring Forms 62
APPENDIX H – Recommended Maintenance Schedule for the Plant 64
APPENDIX J - Repair Information 67

ABBREVIATIONS AND ACRONYMS

CCR	Consumer Confidence Report
DOH	State Department of Health
Ecology	State Department of Ecology
EVCC	Enchanted Valley Country Club
Form	Daily Report Form
FW	Finished water
H-O-A	Hand-Off-Auto
LCC	Lewis County Code
MCC	Motor Control Center
MSDS	Material Safety Data Sheet
PLC	Programmable Logic Controller
RW	Raw water
SCADA	Supervisory Control and Data Acquisition
SOP	Standard Operating Procedures
Turbidity Form	Daily Clarifier Turbidity Form
WQMR	Water Quality Monitoring Requirements
WWTP	Wastewater treatment plant

INTRODUCTION

This Standard Operating Procedures (SOP) manual is developed to provide guidance for county staff tasked to manage and operate the Vader-Enchanted Valley water system. Lewis County began full management of the system on January 1, 2011 after receiving the system by Superior Court.

For more information about the water system leading up to the need and development of the SOP manual, please refer to the following documents.

- "City of Vader, Comprehensive Water System Plan" by Gray & Osborne, Inc., May 2008.
- "City of Vader, Comprehensive Water System Plan Amendment" by Gray & Osborne, Inc., September 2010.
- "DRAFT Water System Plan for the Vader-Enchanted Valley Water System" by Lewis County Public Works, 2014.

The procedures outlined in this manual are based on policies approved in Title 13 of the Lewis County Code (LCC); resolutions approved by the Board of County Commissioners pertaining to utility and cash handling matters, and decisions made by the Administrator of Title 13. The Administrator is the Director of Public Works.

Assistance to the Administrator is provided in a workgroup represented by operations, engineering and fiscal staff. This workgroup reviews and resolves issues in a collaborative, consensus manner. Out of this forum, the workgroup has developed specific practices and procedures. It is the intent of this manual to collect these practices and procedures to provide consistency in the management of the utility. For ease of use, this manual is divided into three sections to correspond to the three divisions of labor: Administrative, Fiscal and Operations. Personnel under the Administrative and Operations sections are under the Department of Public Works.

This manual is also intended to be a work in progress--to be updated for new equipment, new operations procedures, or for improved customer services.

As you use this manual, please keep in mind that the utility has to pay for itself. All revenue from the utility goes back into the costs of treating and delivering water to our customers. Because our customer base is so small, our customers pay for it. We hope users of this manual will keep these goals of accountability and efficiency in mind.

PERSONNEL

WHO DOES WHAT?

An outline of county staff involved in the operation the water system is in this section. This table will be updated at least once a year or when there are significant personnel changes. The Administrator of the utility is the Director of Public Works or his designee.

ALTERNATE COVERAGE

GOAL: Ensure coverage of the Utility 24 hours, 7 days a week throughout the year.

Any time off by the Operator must be approved in advance by the Utility Administrator or the authorized designee. The Utility will secure backup operators for the system. All County employees will follow the policies and procedures in the latest edition of the Lewis County Policy Manual. For extended periods of absence, the Operator may be asked to leave the work cell phone with the Road Supervisor, Utility Engineer, or designated backup operator.

Ensure agreements with backup operators are in place, and review procedures with backup operators periodically.

TABLE 1 - WHO DOES WHAT?			
	Title	Contact **	Task
ADMINISTRATIVE			
Erik Martin	Public Works Director	740-2697, 556-9093 cell	Administers utility per Title 13 LCC, approves all Fund expenditures, budget & high profile issues.
Betsy Dillin (Eff 8-1-16)	Utility Engineer	740-2759	Engineering, funding, budget, reporting, water system plan, complaints & approves invoices.
Robin Saline	Admin Assistant	740-2612	Budget, contracts, personnel.
Lanette Scapillato	Admin Support	740-1122	Maintain database and files, provide admin support as needed & assist customers on non-Fiscal matters.
FISCAL			
Carma Oaksmith	Fiscal Office Mgr	740-1383	Collections, liens, delinquent accts & Fiscal related matters.
Stacey Loflin	Customer Service	740-1371	Primary customer contact for new accts, questions & work orders.
Brenda Lane	Accts Receivable	740-2703	Billing & receipts, Meter Read Reports.
Janelle Lindsey	Accts Payable	740-2755	Pays vendors.
OPERATIONS			
Fred Terry	Area 3 Rd Supervisor	785-3304, 520-0683 cell	Plans maintenance and repair work with WTPO, backup for some work orders.
John Strom	WTPO II	295-3225, 520-2433 cell	Daily Plant operations, WQ monitoring, meter reads, work orders, system maintenance & repairs.
OTHERS			
Central Dispatch		740-1105	Lewis County Alert

** Contact information is for internal use only. Vader customers calling in from toll free 1-855-858-2843 will be initially routed to Fiscal. Fiscal will then determine and forward call to appropriate staff, if needed.

OPERATIONAL PROCEDURES

DAILY PLANT PROCEDURES

PART 1: GETTING STARTED

1. Unlock and open the gate.

2. Unlock the front door, turn on lights, open up the building and put things away.

3. Grab clipboard with the Reservoir Level form located above the sink. Take a reading of the reservoir level and record on the form. Hang up clipboard.

   Grab clipboard with the Daily Report Form (Form) from the counter, and write today's date. A blank copy of the Form is attached in Appendix A.

4. If Plant is running, turn on the taps for both raw and finished water at the sink. Let it run for about 20+ minutes. You want the tap to run long enough to get a representative sample of fresh intake water and of fresh treated water from the clear well. The Raw Water (RW) tap can only be turned on when the Plant is running. RW is turned on and off by using the red handled valve on the "gray water" line located to the right of the cupboard above the sink.

5. Take out two charts for the recorder--the blank charts are located on the file holders attached to the wall next to the desk, and write the date on the blank charts.

6. Unlock the door to the Plant Room (Plant), turn on light and enter.

7. Walk around Plant to note anything unusual. This inspection can also be done as you take readings in Parts 2 through 4.

8. Proceed to Part 2.

PART 2: PLC SCREEN READINGS

1. These steps will correspond to the items in the Form and the PLC screen.
   Record the following from the PLC screen:

   - Clearwell Level (ft)
   - Time (in military time format)
   - Coagulant % (this is under the heading "Laboratory Test" on the Form)
     Scroll down using the up/down arrow to "Coagulant Control".
     Press "Enter.
     Write the coagulant output % on the Form.
     Hit "Return" on the screen.

2. Scroll to "Flow and Cycle Totals".

3. Press "Enter".

4. Start with the screen box called "Clear Well".

   - Clearwell Gallons (100 gallons of treated water going into the clearwell)
     Start with the box called "Clear Well".
     Write the value for "Clearwell Gallons".
   - Influent Gallons (100 gallons of raw water into the WTP)
     Write the value for "Influent Gallons".
   - Total Flushes (tells how many raw water flushes done for each unit, we record the total flushes from each unit)
     Using the same screen, add the # of flushes together and write the total.
   - Total Backwashes (tells how many treated water backwashes done for each unit, we record the total backwashes from each unit)
     Using the same screen, add the # of backwashes and write the total.

5. Press the "Reset box" for the clearwell, influent and flush/backwash to reset to zero.

6. On the same screen, find the box "Run Time Hours".

   - Run Time (Hours) from PC screen.
     Write the number with a decimal point.
   - Treated Effluent: this parameter is not on the screen, and the box on the Form is left blank.

7. Scroll up to "Plant Status".

8. Press "Enter". You have completed taking the readings from the PLC screen.

9. Proceed to Part 3.

PART 3: OTHER PLANT READINGS

1. Look for the two chart recorders located to the left of the PLC.

2. Open the door of Chart Recorder #1.

   (Chart Recorder #1 records raw water turbidity (green ink), finished water turbidity for Filter 1 (blue ink), finished water turbidity for Filter 2 (red ink), and the combined turbidities for Filters 1 and 2 (black ink). Each grid for Chart Recorder #1 represents 0.01 unit.)

3. Lift the tab in the middle of the chart.

4. Note the time position on the chart as indicated by the arrow.

5. Remove chart and replace with a blank one in the correct time position.

6. Push tab down to lock chart.

7. Repeat steps for Chart Recorder #2.

8. Watch the display on Chart Recorder #2. When channel #1 is displayed, write that value for "2nd CL2 Reading" on the Form.

   (The channel #1 display is the chlorine residual in the clearwell read at instantaneous moments. Channel #2 is the pH of the clearwell read instantaneously. Channel #3 is the influent (raw water) in gpm. Channel #4 is the effluent in gpm read at the meter going to town. We don't record effluent in gpm which is read at instantaneous moments, but record the cumulative volume of effluent from the blue box with red numbers—see following steps. Each grid for Chart Recorder #2 represents 0.01 unit.)

9. Place the old charts in the file box marked "Old Charts". The file box is located directly under the file holder for the new charts.

10. Look for the blue box with red numbers, located to the upper left of the PLC.

    (The meter in this box reads volume of treated water going into the distribution system as read from the meter located in the outside vault. The values are in units of 1000 gallons.)

11. Write down the number for Effluent to Town.

12. No reporting is done for the 5 line items under the heading *Pump Settings* on the Form.

13. Proceed to Part 4.

PART 4: CHEMICALS USED

1. Walk over to the chlorine barrel in the SW corner (to the right of the PLC screen).

2. Check and record the level of the chlorine tank. One wants to keep the chlorine tank level about full because chlorine dissipates readily and keeping the tank full retards rapid dissipation. Refer to the section, MIXING CHEMICALS.

   - Chlorine (gallons).
     Stop and record the level of the chlorine barrel in the Form.

3. Look to the left for a green meter labeled "Backwash Flow Meter".

   - Backwash Present (100 gallons).
     Write down the number on the Form.

4. Walk to the back of the Plant and around the corner to the left.

5. Look for the green meter with a tag labeled "Influent Flow Meter" on the wall.

   - Raw Influent Present (100 gallons).
     Read on meter as "Influent Flow Meter FIT001".
     Write this number down for "Raw Influent Present" on the Form.

APPENDICES

APPENDIX A – Daily Monitoring Forms and Instructions

Daily Report Form
Daily Turbidity Form
Water Usage/Sales Form
Daily Distribution Cl2 Readings Form

Laminated Card Instructions & Parameters (4 photo sheets)

Sample of Completed Chain of Custody Form

Turbidity Chart (replaced with electronic reading turbidimeter)

APPENDIX A – Daily Monitoring Forms

DAILY REPORT FORM - VADER WATER SYSTEM PLANT OPERATIONS FOR THE WEEK OF:							
	SUNDAY	MONDAY	TUESDAY	WEDNESDAY	THURSDAY	FRIDAY	SATURDAY
Clearwell Level (ft)							
Time							
Clearwell (100 gallons)							
Influent (100 gallons)							
Total Flushes							
Total Backwashes							
PUMP SETTINGS:							
Chlorine	N/A	N/A	N/A	N/A	N/A	N/A	N/A
Soda Ash	N/A	N/A	N/A	N/A	N/A	N/A	N/A
Alum	N/A	N/A	N/A	N/A	N/A	N/A	N/A
Polymer #1	N/A	N/A	N/A	N/A	N/A	N/A	N/A
Polymer #2	N/A	N/A	N/A	N/A	N/A	N/A	N/A
READINGS:							
Raw Influent Present (100 gallons)							
Treated Effluent	Clearwell	Clearwell	Clearwell	Clearwell	Clearwell	Clearwell	Clearwell
Backwash Present							
Effluent to Town (1000 gallons)							
Run Time (hrs)							
CHEMICALS USED:							
Chlorine (gallons)							
Alum (gallons)							
Polymer (gallons)							
Soda Ash (gallons)							
LABORATORY TEST:							
Raw Turbidity							
Raw Temperature (°C)							
Finished Temperature (°C)							
Raw pH							
Finished pH							
Clearwell Chlorine (mg/L)							
2nd CL2							
Coagulant %							

Daily Clarifier Turbidity Form

MONITORING DAILY TURBIDITY AT PLANT CLARIFIER UNITS
FOR THE MONTH
OF:

	Column 2	Column 3	Column 4	Column 5	Column 6	Column 7	Column 8	Column 9
DATE	READINGS OF FINISHED WATER FROM CLARIFIERS:			LABORATORY RDG:		CLEARWELL ELEV.	CHLORINE RESIDUAL	STREAMING CURRENT METER RDG:
	UNIT #1 (NTU)	UNIT #2 (NTU)	Combined (NTU)	Raw Water (NTU)	Settled from clarifiers (NTU)	(ft)	(mg/L)	(+)
1								
2								
3								
4								
5								
6								
7								
8								
9								
10								
11								
12								
13								
14								
15								
16								
17								
18								
19								
20								
21								
22								
23								
24								
25								
26								
27								
28								
29								
30								
31								

APPENDIX B - Manual Plant Start-Up Procedure

1. Turn off power to the Plant PLC by opening fuses F-3, F-4, F-5 and F-6 in the Plant control panel.

2. Set up the chemical feed pumps to operate manually. If the Plant is to make approximately 150 gpm of water, set the chemical feed pump speed settings to the setting listed below in Table 1. Use the calibration columns for each pump to verify that the pump output matches the output listed below. If the output differs significantly, adjust the pump speed until the output is obtained.

TABLE 1. CHEMICAL FEED PUMP SETTINGS

PUMP TYPE	PUMP SPEED SETTING	PUMP OUTPUT (mL/min)
Alum	60	55
Polymer	25	11
Soda Ash	50	5
Sodium Hypochlorite	50	22

3. Open the raw water valve for each filter by pulling out the handwheel and the turning the wheel to the left until the valve is fully open. Leave the handwheel out when finished.

4. Turn on a raw water pump by turning the H-O-A switch for the raw water pump on the telemetry panel to the Hand position. If this does not bring water to the treatment plant, go down to the raw water pump station and turn on a raw water pump.

5. When water is heard entering the filters, go to the alum and polymer metering pumps and turn the H-O-A switch for one metering pump for each chemical to the Hand position. On the front of the metering pumps to be operated, flip the Internal-Off-External switch to the Internal position.

6. Open the filter-to-waste valves for each filter using the handwheel operator.

7. Check to see that the filtered water valves and the waste valves for each filter are in the closed position. If they are not closed, close them using the handwheel operator.

8. Go to the soda ash and sodium hypochlorite feed pumps, and turn the H-O-A switch for one metering pump for each chemical to the Hand position. On the front of the metering pumps to be operated, flip the Internal-Off-External switch to the Internal position.

9. Go to the MCC panel and turn the H-O-A for wach effluent pump to the Hand position. The effluent pumps should begin pumping water to waste.

10. Once the filtered water turbidimeters indicate a filtered water turbidity of less than 0.25 for each filter, open the filtered water valves on each filter using the handwheels and close the filter-to-waste using the handwheels.

11. Monitor the turbidity and chlorine residual to ensure proper treatment is being provided.

12. Monitor the time the filters run, flush the adsorption clarifier, and backwash the filters at regular intervals. (Approximately every 6 hours for the clarifier and every 18 hours for the filter.)

APPENDIX C - Manual Adsorption Clarifier Flush Procedure

1. Turn off power to the Plant PLC by going to Panel N and flipping circuit breaker No. 14 to the off position.

2. Close the raw water valve for the filter to be flushed by opening by pulling out he handwheel and turning the wheel to the right until the valve is fully closed. Leave the handwheel out when finished.

3. Go to the MCc panel and turn the H-O-A for the effluent pump for the filter to be flushed to the Off position.

4. Close the filtered water valve for the filter to be flushed using the handwheel operator.

5. Open the waste vlave for the filter to be flushed using the handwheel operator.

6. Open the air supply valve to the adsorption clarifier to be flushed using H-O-A on the side of panel.

7. Go to the MCC panel and turn the H-O-A for the air blower to the Hand position.

8. Air will be bubbling into the adsorption clarifier, expanding the clarifier media. Allow the air to bubble for 1-2 minutes.

9. Open the raw water valve using the handwheel operator. Allow the air and water flush to continue for 3-4 minutes.

10. Close the raw water control valve using the handwheel operator.

11. Allow the blower to continue running for one more minute, then turn off the blower at the MCC by putting the H-O-A switch in the Off position.

12. Close the air valve.

13. Allow the clarifier to set for one minute.

14. Close the waste valve using the handwheel operator.

15. Open the raw water valve using the handwheel operator.

16. Open the filtered water valve for the filter to be flushed using the handwheel operator.

17. Reset parameters in PLC.

APPENDIX D - Manual Filter Backwash Procedure

1. Turn off power to the Plant PLC by going to Panel N and flipping circuit breaker No. 14 to the Off position.

2. Close the raw water valve for the filter to be backwashed by pulling out the handwheel and turning the wheel to the right until the valve is fully closed. Leave the handwheel out when finished.

3. Open the filter to waste valve by pulling out the handwheel and turning the wheel to the left until the valve is fully opened.

4. Go to the MCC panel and turn the H-O-A (Hand-Off-Auto) switch for the effluent pump for the filter to be backwashed to the Hand position. Lower the water level in the filter down to approximately 6 inches above the filter media. Turn off the effluent pump.

5. Close the filter to waste using the handwheel operator.

6. Open the waste valve for the filter to be backwashed using the handwheel operator.

7. Open the air supply valve to the filter to be backwashed using the switch on the side of the filter.

8. Go the MCC panel and start the air blower by turning the H-O-A switch for the air blower to the Hand position.

9. Open the backwash valve to the filter using the handwheel.

10. After 1-2 minutes, go to the MCC panel and start the backwash panel by turning the H-O-A switch for the backwash pump to the Hand position.

11. Adjust the backwash flow control valve so that it provides 40 gpm.

12. After 2-3 minutes, turn off the blower at the MCC and close the air valve.

13. Open the backwash flow control valve until it provides 300 gpm. Continue operating the backwash pump for 3-5 minutes until the water above the filter appears clear.

14. Turn off the backwash pump at the MCC.

15. Close the waste valve using the handwheel operator.

16. Open the filter-to-waste vavle using the handwheel operator.

17. Open the raw water valve using the handwheel operator.

18. Turn on the effluent pump using the H-O-A switch at the MCC.

19. Monitor the filtered water turbidity level. Once the turbidity drops below 0.25 NTU for a period of one minute, open the filtered water valve and close the filter-to-waste valve using the handwheel operator.

Appendix E - Manual Adsorption Clarifier De-plugging Procedure

This procedure is to be used when the adsorption clarifiers are still plugged after flushing of the adsorption clarifiers and backwashing of the filters. This incident is infrequent but it has happened with heavy turbid RW. This procedure is outlined according to technical assistance from Evergreen Rural Water.

1. Follow Steps #1 through #4 for "Manual Adsorption Clarifier Flush Procedure".
2. Open the waste valve for the filter to be flushed using the handwheel operator.
3. Draw down the water level in the clarifier to about 6 inches. Close the waste valve using the handwheel operator.
4. Place about 5 gallons of sodium hypochlorite in the clarifier chamber.
5. Let the liquid in the clarifier chamber sit for about 5 minutes.
6. Open the air supply valve to the adsorption clarifier to be flushed using the H-O-A switch on the side of the panel.
7. Air will be bubbling into the adsorption clarifier, expanding the clarifier media. Allow the air to bubble for 1-2 minutes.
8. Turn off the blower at the MCC panel by putting the H-O-A switch to the Off position.
9. Close the air valve.
10. Allow the clarifier to sit for 1-2 minutes.
11. Repeat Steps #6 through #10 until deposits on the clarifier are removed or look to be about the same state of removal under normal absorption clarifier flush procedures.
12. Follow Steps #9 through #17 for "Manual Adsorption Clarifier Flush Procedure".

APPENDIX F – Monthly Reporting and Monitoring Forms

APPENDIX G – Annual Reporting and Monitoring Forms

APPENDIX H – Maintenance Information

RECOMMENDED MAINTENANCE SCHEDULE FOR THE WATER PLANT

FREQUENCY	COMPONENT	INSPECTION AND MAINTENANCE
Daily	Chemical Feed Pumps	Check for operation, feed lines are not frayed and kinked.
Daily	Chemical Feed Tanks	Visually check solution levels, and make solutions if necessary.
Daily	Filters	Check floc characteristics above filter.
Daily	Turbidimeter	Visually check the flow through the turbidimeters. The desired flow rate should be in the range of 250-750 ml/min.
Daily	Turbidimeter	Check online meter reading against portable meter reading.
Daily	Valves	Visually check valves for operation and leaks.
Daily	Electric Panel/Motor Control Center (MCC)	Visually check unit for proper operation.
Daily	All Pump Mechanical Seals	Check seals for leakage.
Daily	Motors	Check motor bearing temperature. If bearings are running hot, consult motor manufacturer's instructions.
Daily	Online Chlorine Analyzer	Check indicator reagents.
Weekly	Motors	Clean oil, dust, dirt, water and chemicals from the exterior of motor. Make sure motor air intake and outlets (fan cooled motor) are unobstructed.
Weekly	pH Meter	Calibrate.
Weekly	Adsorption Media	Check condition, wash floc accumulation if necessary.
Weekly	Online Chlorine Analyzer	Check online meter reading against reliable portable water reading. Calibrate online meter if necessary.
Monthly	Portable Turbidimeter	Check standardization with Glex secondary standard.
Monthly	Alarms and Callout System	Test.
Monthly	Online Chlorine Analyzer	Clean colorimeter measuring cell with 19.2 N sulfuric acid.
Quarterly	Instrumentation	Calibrate.
Quarterly	Plant Controls	Check operations through one cycle. Test controller inputs (level switches and alarms), and check for proper Plant response.
Quarterly	Heater and Thermostat	Inspect and clean units.
Every 4 Months	Turbidimeter	Calibrate unit. Drain and clean turbidimeter body, tubing and inlet.
Semi-Annually	Chemical Feed Tanks	Drain and clean.
Semi-Annually	Floc Tanks	Drain and clean.
Semi-Annually	Online Chlorine Analyzer	Replace pump tubing.

FREQUENCY	COMPONENT	INSPECTION AND MAINTENANCE
Annually	Chemical Feed Pumps	Calibrate.
Annually	Vertical Turbine Pump	Change oil and grease bearings.
Annually	Flow Meter	Clean and inspect propeller and bearing.
Annually	Filter Media	Check for "mudballs" or other solid accumulation.
Annually	Filter Media	Check filter for loss of media.
Annually	Chemical Pumps	Clean and service pumps.
Annually	Static Mixer	Clean mixer.
Annually	Blowers	Lubricate.
4-6 Years	Clearwell and Reservoir	Conduct interior and exterior inspection for solids and structural integrity. Clean and correct structural problems if necessary.

APPENDIX J - Repair Information

AWWA Small Systems Pipe Repair Checklist, July 2008

6. Check and record the levels of the three chemical tanks along the east wall of the plant on the daily log form. Use the depth gage to measure the level and write the number in the proper lines in the Form. Wipe the depth gage after each use.

7. These tanks are for alum, soda ash and polymer; and the levels should be about full in anticipation of use.

   (The determination of the usage rate of these chemicals in the tanks is an art and dependent upon season, weather forecasts, and Tacoma Dam activities which could affect turbidity at the intake.)

8. If chemical tanks need to be mixed, refer to the section, MIXING CHEMICALS.

9. Exit the Plant.

10. Place the old charts in the file box marked "Old Charts". The file box is located directly under the file holder for the new charts.

11. Proceed to Part 5.

PART 5: LABORATORY PROCEDURES

1. These steps will correspond to the items under the Form heading, "LABORATORY TEST".

2. If taps were not turned on in Part 1, then refer to Step 4 in Part 1 to turn on the taps for both raw and finished water at the sink.

3. Take the 100 ml beaker with the "R" on the side and fill it with the raw water.

4. Turn off the raw water tap.

5. Pour some of the raw sample into the sample cell without the 10 ml mark on it. Fill to the top but do not let it overflow.

6. Turn on the turbidimeter and wait for it to reset to zero. Lift the lid, place sample cell in to the meter with the diamond pointing outward, close the lid, and press "Read".

7. The display will flash while the sample is analyzed. When the turbidimeter is done reading, write the value down for "Raw Turbidity" on the Form.

8. Turn the meter off and remove the sample.

9. Turn on the pH meter, remove the probe from the storage solution, place the beaker with the raw sample on the counter under the probe, and insert probe into the "R" beaker.

10. The display will begin to count up or down depending on the pH of the sample. When the display settles out, read the pH meter, and write the value down for "Raw pH" on the Form.

11. The pH meter will also give you a value for temperature. Write the value down for "Raw Temperature" on the Form. Put the probe into the storage solution.

12. Empty the raw water sample containers, rinse with finished water, and place on the drying rack/towel.

13. The raw water tests are completed. Proceed to the tests for finished water.

14. Take the 100 ml beaker with the "F" on the side and fill it with the finished water.

15. Turn off the finished water tap.

16. Pour some of the finished water into one of the sample cells that has a line marked to the 10 ml mark.

17. Cap the cell, and wipe to remove any moisture and fingerprints.

18. Lift the cover from the chlorine meter, place the sample cell into the meter, put cover on, and press "zero" to start.

19. When the meter reads zero, remove the cover, take out the cell, remove cap from the cell, place DPD dispenser over the top, push the button on the side of the dispenser to emit a pre-measured dose of DPD reagent, place cap back on the cell, and shake the cell to mix the water-and-DPD sample.

20. Wipe the cell to remove any moisture and fingerprints, put cell back in the meter, place cover on, and press "read".

21. Take the reading for residual chlorine and write down the value for "Clear well Chlorine".

22. Discard sample from cell, rinse chlorine cells with finished water, and place on the drying rack/towel.

23. Test the finish water for pH using the F beaker and follow Steps #9 to #10 for the pH meter using the F beaker.

24. Write down the values for "Finished pH" and "Finished Temperature" on the Form.

25. Empty the finished water sample containers, rinse with finished water, and place on the drying rack/towel.

26. The Laboratory Procedure is complete. Proceed to Part 6.

PART 6: MONITORING CLARIFIER PERFORMANCE

1. This test procedure is done daily to gage the performance of the Adsorption Clarifiers by monitoring the settled NTU of the water from the adsorption clarifiers before the water undergoes the mixed media filter.

2. Use the clipboard with the Daily Clarifier Turbidity Form (Turbidity Form). The clipboard is stored above the sink. A copy is provided in Appendix B.

3. Take the sample cell used to monitor the turbidity of raw water in Part 5 along with the small beaker and clipboard, and walk into the filter platform area.

4. Fill the sample cell with water to the top but do not let it overflow. It does not matter which filter unit you take it from, but be random about it throughout the week.

5. Take the sample over the turbidimeter.

6. Turn on the turbidimeter and wait for it to reset to zero.

7. Lift the lid, place sample cell in the meter with the diamond pointing outward, close the lid, and press "Read".

8. When the turbidimeter is done reading, write the value down for "Settled NTU" in column 6 on the Turbidity Form.

9. Transfer some of the data from the Form onto the Turbidity Form:

   Raw Turbidity from the Form = Column 5 for Raw Water on Turbidity Form.
   Clearwell Level from the Form = Column 7 for Clearwell Elevation on Turbidity Form.
   Clearwell Chlorine from the Form = Column 8 for Chlorine Residual on Turbidity Form.

10. Walk over to the meters recording the turbidity from each clarifier unit. These meters are located on the north wall of the Plant. Record the readings in Columns 2-4.

    (Plant NTU is the same as "combined NTU" listed as Column 4 in the Turbidity Form.)
    (The goals to be achieved in Part 6 are:
    Settled Water Turbidity ≤ 2 NTU @95% of the time when annual average source turbidity is > 10 NTU.
    Settled Water Turbidity ≤ 1 NTU @95% of the time when annual average source turbidity is ≤ 10 NTU.)

11. Read and record the value for Column 9, Streaming Current Meter. This meter is located on the east side of the Plant, opposite the chemical tanks.

12. The Turbidity Form is complete. Proceed to Part 7.

PART 7: WINDING DOWN

1. Walk back to the turbidimeters in the plant. Look at values to see if it is within reasonable range.

2. Scroll down to Coagulant Control. If this is okay, in reasonable correlation range of past experienced raw NTU and dosage, then you can start other activities or close up. Continue scrolling and checking other parameters. If things look good, you can start other activities or close up.

3. Lock Plant door when you leave the Plant to work on other tasks. Call in to Area 3 about your planned tasks off the Plant grounds as a safety procedure. If Area 3 cannot be reached, then contact Engineering by email or phone about your planned tasks.

4. When closing up for the day, adjust the thermostat for the evening.

5. Take a reading of the reservoir level, record it on the Reservoir Level form, and hang up the clipboard on the cupboard above the sink.

6. Turn off all unnecessary appliances (i.e., coffee pot, computer, heaters, fans, equipment).
7. Ensure security camera is on.
8. Turn off interior lights and lock front door.

MIXING CHEMICALS

Chemical storage areas shall be kept as clean as possible to prevent chemical dust from creating maintenance problems.

- Alum in solution with water forms acid conditions. Alum dust combined with a little moisture can become quite corrosive to equipment, metals and finishes.
- Polymer solutions or polymer powders mixed with a little moisture forms a very slippery film.

Dust from chemicals and spilt chemicals shall be cleaned up at once; not allowed to build up on floors, walls, pumps, valves, instruments, and doors; and the floor cleaned and dried at once to prevent slipping.

The chemicals used in water treatment require some precautions for storage and handling. Know and keep the material safety data sheet (MSDS) and handling information accessible. MSDS are kept in a binder labeled "MSDS" on the bookshelf.

When mixing alum, one 50-gallon batch of alum or/and one 50-gallon batch of polymer can be mixed while the Plant is running. You must shut down the Plant to mix a batch of soda ash or more than one batch of alum.

SODA ASH

1. Mix one bag (50 lbs) per 100 gallons water.
2. Turn on mixer.
3. Turn on water.
4. Pour soda ash into (be sure there are no lumps) the tank.
5. Stir with designated stick to ensure no sticking on the bottom of the tank.
6. Record the number of batches added for the day by circling the number of batches in daily log form.

   (The amount used for the current day is made taking the difference of the current day's and next day's readings in the daily log form as part of the daily procedure in "Part 4: CHEMICALS USED".)

ALUM (Hydrated Potassium Aluminum Sulfate)

1. Mix one bag (50 lbs) per 50 gallons water.
2. Turn on mixer.
3. Turn on water.
4. Pour alum into (be sure there are no lumps) the tank.

5. Stir with designated stick to ensure no sticking on the bottom of the tank.
6. Record the number of batches added for the day by circling the number of batches in daily log form.

POLYMER

1. Get the graduated cylinder that is marked with a fill level from the dry polymer storage barrel. Fill polymer to the marked level which will be mixed with 50 gallons of water.
2. Turn on mixer.
3. Turn on water.
4. Slowly pour the dry polymer into the funnel that will mix it with the water.
5. Stir with designated stick to ensure no sticking on the bottom of the tank.
6. Record the number of batches added for the day by circling the number of batches in daily log form.
7. Convert usage of polymer to pounds by using a factor of 0.2 lb of polymer to one gallon of polymer solution. Each batch is 50 gallons of polymer solution.

SODIUM HYPOCHLORITE

1. When mixing sodium hydrochlorite (chlorine) the Plant doesn't need to be offline, unless the chlorine tank is really low. Generally, you want to maintain the chlorine tank to be almost full to retard dissipation of chlorine.
2. Note current level of tank to determine needed volume. Markings on the chlorine tank are in 5-gallons and approximate 1-gallon.
3. The dilution ration is one gallon chlorine to 7 gallons water.
4. Remove blue plug.
5. Insert hose with the valve.
6. Open the valve on the hose.
7. Crank the chlorine pump to add 1 gallon of chlorine.
8. Rotate cover of tank to align the hold under the water spigot.
9. Slowly fill tank with water to correspond with the added chlorine.
10. Chlorine will build up crystals at the screened intake of the chlorine line. When you see a lot of air bubbles coming from the intake line, check the screened intake.
11. Shut water off.
12. Cap chlorine tank with the blue cap.

13. Record the number of batches added for the day by circling the number of batches in daily log form.

14. Convert usage of chlorine to pounds by using a factor of 0.13 lb of chlorine to one gallon of 12.5% chlorine solution.

OPERATOR DUTIES AT THE INTAKE FACILITY

Operations staff shall once a week or more often if needed, inspect the intake pump, booster pumps and pump station building. Follow the guidance in the Maintenance section of this document.

SHUTTING DOWN THE PLANT

There may be times when the Plant needs to be shut down such as:

- High turbidity levels of the raw water.
- Damage to the intake facilities.

In that case, follow the instructions below to shut down the Plant.

1. Go to the PLC unit.
2. Look for the three boxes "Plant", "Unit 1" and "Unit 2" at the top of the PLC screen.
3. Press the STOP box under "Plant" heading.
4. Press the the OFF boxes under the "Unit 1" and "Unit 2" headings.

Do not shut the Plant down by shutting off the power to the Plant. If the main circuit breaker for the Plant is pulled, the settings for the Plant will reset at default settings, and all recorded data is erased.

STARTING UP THE PLANT

To start up the Plant, press the AUTO boxes located under the "Plant", "Unit 1" and "Unit 2" headings.

MANUAL PLANT START-UP

Follow the procedures outlined in Appendix C, Manual Plant Start-Up Procedure.

MANUAL ADSORPTION CLARIFIER FLUSH PROCEDURE

Follow the procedures outlined in Appendix D, Manual Adsorption Clarifier Flush Procedure.

MANUAL FILTER BACKWASH PROCEDURE

Follow the procedures outlined in Appendix E, Manual Filter Backwash Procedure.

MANUAL ADSORPTION CLARIFIER DE-PLUGGING PROCEDURE

This procedure is to be used when the adsorption clarifiers are still plugged after flushing of the adsorption clarifiers and backwashing of the filters. This incident is infrequent but it has happened with heavy turbid RW. Follow the procedures outlined in Appendix F, Manual Adsorption Clarifier De-plugging Procedure.

TURBIDIMETER

A Hach 1720C turbidimeter continuously measures raw water turbidity at the Intake Structure.

There are two Hach 1720E low range turbidimeters in the plant. These two five-year old meters were installed in August 2014 and monitor finished water turbidity for filter #1 and #2. Both units are located on the side of plant #1 which directly faces the door to the plant room. The meter measuring the combined finished water is a GLI Accu4 low range turbidimeter located on the wall at eh effluent end of plant #1.

Manufacturer literature about instrument operation and analyzer calibration are in Appendix H.

REPORTING AND MONITORING

MONTHLY REPORTING AND MONITORING

A summary of the information from the daily log form and the recorder charts needs to be transferred into the DOH Monthly Report Forms (#331-023, 331-048, 331-172). This form must be sent in to DOH by the 15th day of the following month and to: DOH, SW Regional Operations, POB 47823, Olympia, WA 98504-7823. Blank copies of the forms are housed in the Operator's computer. Copies of these report forms are in Appendix F.

ID parameters are:

- PWS ID is 90900E
- Source ID is SO1
- PWS Name is "Vader – Enchanted Valley".
- Source Name is "Cowlitz River".

Reporting for the WTP backwash lagoon discharge must be submitted to Ecology by the 15th day of the following month using the form "WTP Backwash Monitoring Report Group 1 Facilities". The permit no. is WAG 64-1004.

Once the forms are completed, the Operator will sign the packet, scan and forward an electronic copy to Engineering, and give the original packets to Engineering.

The WTP backwash reporting form has to be signed by the Utility Administrator or a designee as authorized in a form to Ecology. If in doubt, get the Administrator's signature on the backwash form. Engineering will review, approve and send the originals to DOH and Ecology.

BACKWASH LAGOON DISCHARGE

Monthly sampling for settleable solids, chlorine, pH and turbidity of the backwash lagoon discharge need to be done every month. The samples are taken at the last catch basin on the southwest corner of the lagoons at the 8" effluent line (inlet into the catch basin).

1. Get the blue water pitcher that is stored in the cupboard above the sink.

2. Go the sample site—last catch basin on the southwest corner of the lagoons at the 8" effluent line.

3. Lift the grate and lay aside.

4. Dip out one pitcher full of water. This can only be done when there is flow in the effluent line (inlet into the catch basin). Be careful not to stir up any sediment.

5. Replace grate and shut gate. Return to the WTP lab.

6. Fill a sample cell for turbidity and one for chlorine lab tests.

7. Fill the small beaker labeled "R" with water from the pitcher.

8. Pour the remaining water in the pitcher into an Imhoff cone and fill to the one liter mark at the top. Let this water sit for one hour.

9. Turn on the pH meter and place the probe in the beaker.

10. Record the pH reading on the "Back Wash Pond Test" sheet on the clipboard hung on the cupboard.

11. The permitted pH must range from 6 to 9. If a low reading (up to 6.2) is obtained, consider application of sodium bicarbonate into lagoon. As a start, mix 2 cups and take a reading later in the day. Note on form.

12. Place the chlorine sample in the chlorine meter and follow the steps to conduct a chlorine reading as outlined in the daily Laboratory Procedures. Record the reading on the "Back Wash Pond Test" form.

13. The permitted chlorine reading is an averaged value that must range from 0.07 to 0.15.

14. Place the turbidity sample in the turbidity meter and follow the steps to conduct a turbidity reading as outlined in the daily Laboratory Procedures. Record the reading on the "Back Wash Pond Test" form.

15. After an hour, read the Imhoff cone and record the reading on the "Back Wash Pond Test" form. The permitted Settleable Solids reading is an averaged value that must not exceed 0.2 ml/l.

16. Enter the information from the "Back Wash Pond Test" form into the monthly reporting form. The monthly reporting form is on the computer Desktop and labeled as "Backwash1.xls".

COLIFORM MONITORING PLAN

Monthly samples of total coliform of the raw and finished water quality MUST be taken and the results submitted on a regular basis to DOH. Samples of raw water total coliform must be taken at the WTP raw water sink, and delivered to the Lewis County Water Quality laboratory (LC Lab) by the end of day on any Monday.

1. Take a small plastic sample bottle as provided from LC Health.

2. Label the bottle as "R" for raw water.

3. Let the raw water tap at the Plant sink run for about 30 minutes.

4. Fill the sample bottle with the raw water. Do not overfill the bottle.

5. Complete the paperwork for LC Health.

Samples of the finished water total coliform are taken at a routine site every month, and can be dropped off any day the LC Lab is open. The routine sites are identified in the Coliform

Monitoring Plan, revised January 2013. The Coliform Monitoring Plan also outlines locations of the Repeat Sample sites and steps to take in the event an unsatisfactory sample occurs.

1. Take a sample bottle as provided from LC Health, and a chlorine cell bottle from the Plant chlorine test kit to Site #1.
2. Label all sample bottles from Site #1 as "1".
3. Locate the sample station/outside faucet. Generally, the samples will be taken outside, but if you have an opportunity to take the sample from an inside faucet, follow the same steps to disinfect the faucet.
4. Use the propane torch located in the truck tool box to heat exterior faucets. Do not torch any interior faucets with the propane torch!
5. Turn on the faucet and let it run for about 5 minutes at full force.
6. Decrease the flow to enable filling the sample bottle without overflowing. Cap the bottle.
7. Draw a sample using the sample cell in your chlorine test kit. Cap the bottle.
8. Turn off the faucet and secure Site #1. If using a sample station, follow the instructions to pump the station free of water to prevent ice in tubing. Follow the instructions outlined in the laminated card enclosed at every sampling station.
9. Take the sample bottles back to the truck and wipe the outside with a paper towel.
10. Conduct the chlorine analysis by following steps 18 through 20 in PART 5: LABORATORY PROCEDURES. Take the reading for Site #1.
11. Return to WTP and write down the readings as residual chlorine in the LC Health lab slip.
12. Discard samples from cells, rinse chlorine cells with finished water, and place on the drying rack/towel.
13. Complete the lab slip for all samples. Use the sample location name as identified in the Coliform Monitoring Plan.
14. Deliver samples to the LC Health lab.
15. Pick up the same number of new sample bottles that were dropped off.

Hours of the LC Water Quality laboratory facility are 8 AM to 5 PM Monday through Wednesday with lunch closure from 12:30 to 1:30 PM.

The Plant should keep enough sterilized bottles available for any unexpected sampling. Generally, we keep two month's supply of LC lab sterilized bottles and several disposable sterilized bottles from LC. When samples are dropped off, the Utility will pick up the same number of sterilized bottles. The Utility will track and rotate bottles so as to keep bottles no longer than six months. This process will continue until modified by the Administrator.

ANNUAL REPORTING AND MONITORING

DOH prepares an annual Water Quality Monitoring Report (WQMR) that outlines the monitoring activities required for that year and for other specific activities to meet operation requirements. This report is usually sent out in the first quarter of the calendar year. Upon receipt, the Engineer and Operator will review these requirements and schedule activities accordingly, have the Contract Laboratory on our service vendor list, and inform the Contract Laboratory of the upcoming monitoring activities so as to get the containers and instructions in a timely manner.

Local Laboratory: Lewis County Environmental Health Laboratory
360 NW North Street
Chehalis, WA 98532
360-740-1222

Contract Laboratory: ALS Environmental
1317 South 13th Avenue
Kelso, WA 98626
800-695-7222

TOTAL ORGANIC CONTAMINANTS

Sampling for total organic contaminants of the raw water is usually done as part of TTHM and HAA5 monitoring, or other monitoring as required by DOH. Samples are taken from the raw water tap at the WTP sink.

1. Let the raw water tap at the Plant sink run for about 30 minutes.
2. Fill the sample bottle with the raw water. Do not overfill the bottle as there are preservatives in the sample bottle.
3. Complete the Chain-of-Custody form and any accompanying paperwork. These forms will come from the Contract Laboratory. See Appendix G for a sample copy of a completed form.
4. Pack the sample in the cooler/ice chest from the contract laboratory. Place ice packs snugly around the bottle.
5. Deliver the cooler with paperwork to the Contract Laboratory.
6. Pick up a cooler/ice chest for the subsequent month's sampling. Store ice packs in the freezer until the next sampling event.

TTHM and HAA5

Total Trihalomethane (TTHM) and Halo-Acetic Acids (HAA5) are taken during the warmest months. These contaminants are by-products of drinking water disinfection, and reported in units of ppb. Refer to the most current Disinfection Byproducts (DBP) Monitoring Plan for the sampling schedule and location. The most current DBP Plan is "Stage 2 DBP Monitoring Plan-Surface Water" dated April 24, 2013.

1. Take the ice packs from the freezer. These are the ice packs that came with the cooler from the Contract Laboratory.
2. Take three sample bottles and cooler, and go to the designated sampling site.
3. Unlock the outdoor faucet.
4. Heat the faucet with the blow torch.
5. Turn the faucet and let the water run for about 5 minutes at full force.
6. Fill the HAA5 sample bottle with finished water. Do not overfill the bottle as there are preservatives in the sample bottle.
7. Cap the HAA5 sample bottle and place in the cooler.
8. Fill the TTHM sample bottle with finished water until it is almost full.
9. Fill the bottle cap with finished water. Pour water from the cap into the bottle until the bottle is about to overflow.
10. Fill the cap, quickly place the cap on the bottle, and tighten cap.
11. Turn the bottle upside down.
12. Look at the bottom to ensure there is no air pocket in the bottle.
13. If there is air in the bottle, then uncap and top off until there is no air in the bottle.
14. Repeat Steps #5 through #10 to fill the second TTHM bottle.
15. Complete the Chain-of-Custody form and any accompanying paperwork. See Appendix G for a sample copy of a completed form.
16. Pack the sample in the cooler/ice chest from the contract laboratory. Place ice packs snugly around the bottle.

DELIVERY TO CONTRACT LABORATORY

1. Deliver the cooler with paperwork to the Contract Laboratory.
2. If the subsequent sample date is within 3 months and it is convenient to do so, then pick up a cooler/ice chest for the subsequent sampling when the TOC samples are dropped off. At times, the contract laboratory may ship the cooler for the next HAA5 and TTHM sampling to us. Store ice packs in the Plant freezer until the next sampling event.

NITRATE

Nitrate sampling is done annually from the raw water tap at the Plant sink. Use a sample bottle from LC Health.

1. Let the raw water tap at the Plant sink run for about 30 minutes.
2. Fill the sample bottle with the raw water.
3. Complete the lab slip for LC Health.

4. Deliver the sample to LC Health Laboratory.

LEAD AND COPPER (Pb and Cu)

Refer to the most current version of the Pb and Cu Monitoring Plan. DOH will have this monitoring noted in their annual WQMR for the water system: these are usually done every three years and with our Contract Laboratory.

CONSUMER CONFIDENCE REPORT

The State Consumer Confidence Report (CCR) Certification Report must be submitted to DOH by July 1. One requirement of this report is to prepare and deliver copies of a Consumer Confidence Report for that year to ALL of our water system customers. As a cost saving measure, send the report out with the customer billings. The last customer billing will be the June billing.

The CCR must summarize the monitoring and results required in the WQMR of that year. For example if the WQMR instructed us to have TTHM, HAA5, Nitrates, and Cu and Pb testing for that year, then the CCR must show the results for those five types of analyses. Refer to prior issues of the CCR which are housed in the Vader Water System under the folder "Newsletter". Prior issues are also available on the Lewis County website under the water utility in Public Works.

WATER USE EFFICIENCY ANNUAL PERFORMANCE REPORT

A completed water use efficiency annual performance report must be submitted to DOH by the end of June. The period used for our reporting is from December of the preceding year to November of the reporting year. For example, the reporting year of 2012 is from December 2011 through November 2012. The reporting form is available from the DOH website.

This reporting requirement is to comply with the State Water Use Efficiency Act of 1989. For more information about this act and related guidelines, refer to the DOH website and the section in the current WSP.

To complete this form, you will need to track all drops of finished water leaving the Plant. You want to account for the finished water volume at the system-to-town meter at the Plant grounds with all volumes used by customers and the utility. You will need to track volumes used for maintenance flushing and repairs, lost from December 1 until leak repairs are made, approved hydrant uses by PW and approved contractors, firefighting and fire tankers, sold as noted on customer billings, and other accounted uses. These are accounted uses and further broken down into revenue generating and non-revenue generating water. Use the file "Water Use Notebook.xlxs" housed in the Vader Water System under the "Water Use" folder.

Ideally, we would like to account for every drop of finished water, but we don't have a closed, ideal system. What we want to do is to minimize distribution system leakage, and we have developed an Action Plan to control water loss. Preferably, the Action Plan should be updated and reviewed annually by the utility workgroup when the water use efficiency annual report is prepared. A copy of the Action Plan to reduce water loss is in the new county WSP.

CALLOUTS AND MAIN BREAKS

RESPONDING TO TELEPHONE CALLOUTS

The control system is programmed to call contacts in a sequential order. Usually the Operator will be the first responder and will cancel the callout. In the event the first responder is unable to do so, the system will call down the list. The sequence is as follows:

1. The next responder can cancel IF the callout is saying that "the problem has been corrected". If you do not hear this message, then we want to let the Operator know.

2. If you hear this message and wish to cancel the callout, then listen to the recorded message repeat three times, and wait for the message to ask if you wish to cancel the callout. Follow the instructions and punch in "555" to cancel.

3. Follow up with a phone call to the Operator about the message cancellation.

PIPE REPAIR PROCEDURE

1. Locate leak. Note locations of nearby valves and identify affected customers.

2. Call in to Area Road Supervisor and Engineering about location, site conditions, and plan. Coordinate with Engineering about public notification if the system has depressurized.

3. Get pipe repair supplies, equipment and personnel on site to start repair. Typical equipment includes: backhoe, trash pump, repair couplers, pipe segments, saw, shovels, rakes, wrenches, valve keys, traffic cones & signage, chlorine, clean 5-gallon bucket, and various hand tools to tighten fittings.

4. Once leak is located, assess the situation and identify affected customers. If this is a main break, then notify DOH. They will advise as to whether this is a boil water advisory situation. If it is, DOH will issue a public notice and the Utility will contact the two local radio stations, activate Lewis County Alert, post notices at the public sites, and deliver notices to all customers. Coordinate with Engineering about the text of the public notification. The public sites are at:

   - Cowlitz-Lewis County Fire District #20
   - City Hall
   - Little Crane restaurant
   - Post Office
   - J & G Grocery
   - Mt St Helens Grocery
   - Enchanted Valley Bulletin Board.

5. Isolate the leak area. As a rule, close and open valves slowly at all times to avoid abrupt pressure changes that could cause additional breaks. Close the lower-pressure-side-valve from the leak. Close the higher-pressure-side-valve to the point that you hear "screaming" and there is still pressure through the line (i.e., water is coming OUT of the line). "Screaming" is valve noise from the water rushing through the partially closed higher-pressure-side-valve.

6. Dig alongside the leak to make a sump hole. This hole must be deep enough to allow water to collect, yet NOT submerge the leak site. At the same time, the sump must be

dewatered by either a constructed channel (i.e., scoop with backhoe) or pumping (i.e., trash pump).

7. When the sump hole is constructed and a draining method is established, then clean the segment of pipe to be repaired. You want to have a clean pipe with a small amount of water leaking out.

8. Completely shut off the higher-pressure-side valve to fully isolate the leak.

9. Examine the leak. Determine the type of existing pipe and type of repair.

   If the existing main is a transite line (also known as asphalt cement (AC)) then don a mask and disposable gloves, and keep the pipe wet during the cutting. Use the masks designated for AC work by the Utility.

   Generally, if it is a simple "hole", then a repair clamp will be adequate. If it is a break or a large crack, then two couplers and a new length of replacement pipe will be needed. The replacement pipe type will generally be PVC 900 or approved industry standard for potable water.

   All fittings, pipe and parts must be disinfected with a solution of at least 200 mg/l of chlorine (one oz of chlorine to one gallon of water).

10. Install the disinfected components and tighten bolts. No grit or dirt particles are allowed on the pipe (new and existing), clamp, gaskets and fittings. The gasket must lay flat and overlap itself.

11. Slowly open the higher-pressure-side valve and check for leaks. No leakage is acceptable. If there is still leakage, then shut the valve, and fix the repair site with disinfected parts.

12. Once there is no leakage observed from the repair site, open the fire hydrant on the lower side of the repair. (We are assuming that there is a fire hydrant between the valves used to isolate the leak.) You want to flush any contaminants out so let it run for a few minutes. Then close the hydrant and slowly open the lower-pressure-side valve.

13. Place backfill over the repair site in 6" lifts, and compact with the backhoe bucket. Clean up the site and remove traffic control.

14. If Lewis County Alert, flyers, volunteers or other help were used to notify the affected customers then notify Engineering/Area 3 Road/other LC divisions that the repair is complete and water service is back online. The Administrator, Area 3 Road Supervisor, and Road Maintenance Manager are authorized to activate Lewis County Alert. If

needed and authorized, a Lewis County Alert message may be sent to customers that the repair is completed and any next steps.

15. Notify the Area 3 Road Supervisor that the repair is complete and note time of completion.

16. If DOH determines that the break is a boil water situation, then two satisfactory sets of coliform samples from five sites are needed before DOH will lift the boil water advisory. Take one set at five sites, and another set at the same sites 24 hours later.

    Some site selection guidelines are: use immediate upstream and downstream sites close to the break and within the isolated segment of main; use upstream and downstream sites outside of the isolated segment of main and about a block away; and a further downstream site near the end of the downstream flush point or closest dead end line. Take another set using the same sites at least 24 hours later. To save time, arrange to have the lab contact you as soon as possible about the results from the first sample set. If results from the first sample site indicate unsatisfactory results, then additional flushing and disinfection will be needed before drawing another set of samples.

    DOH also want to see chlorine concentrations at the same level or higher than the levels prior to the break so take chlorine readings of each sample.

    For instructions on drawing coliform samples, see "Coliform Monitoring Plan" under the "Reporting and Monitoring" section.

    Notify Utility Administrator, Utility Manager and Area 3 Road Supervisor about the results of all sets of coliform samples.

17. Utility Manager or Administrator will contact DOH about the completed sampling and repair.

18. Utility personnel authorized to activate Lewis County Alert will request a Lewis County Alert message be sent to customers that the system is off the boil water advisory order.

19. A pipe repair checklist is in Appendix J. This checklist (July 2008) was developed by AWWA for use in small system pipe repairs.

PROGRAMS

CROSS-CONNECTION CONTROL PROGRAM

The cross-connection control program is in Chapter 6 of the "City of Vader Comprehensive Water System Plan, May 2008". Although the WSP mentions three existing cross-connection assemblies, there is only one existing cross-connection assembly in the system: Vader wastewater treatment plant. Air gaps are designed in the filter-to-waste processes in the WTP, and the Little Crane restaurant changed practices to use a soda beverage dispenser isolated from their potable water lines.

The backflow prevention assembly at the WWTP is located outside the Laboratory Control and Chlorination building on the WWTP grounds. According to Lewis County regulations, the customer is responsible for annual testing of their backflow prevention assemblies: the City of Vader will test for the assembly at the WWTP.

A cross-connection assembly was installed near the water meter when Vader supplied water to the Enchanted Valley County Club (EVCC). This assembly was removed when the EVCC system became part of the Vader system in 2009.

Initial cross-connection hazard surveys are required for new and existing customers before connection to the water system.

SERVICE METERS

GOAL: Replace all water service meters to read in gallons by 2014.

The system has water service meters that read gallons in Vader and cf in Enchanted Valley County Club (EVCC). The service meters in Vader are a mix of Neptune, Badger, and Master Meter; and in EVCC is primarily Neptune. Generally, service meters should be replaced every ten years. The Utility started the meter replacement program in 2012 to replace all meters to read in gallons.

LEAK DETECTION

GOAL: Manage and operate the system efficiently; and reduce system leakage to below 20% at the time of the next Water System Plan revision (estimated to be in 2015).

1. Investigate sites of unusual wetness that is present year round; and to customer reports.
2. Educate customers about performing leak detection of their customer service lines.
3. Use leak detection services to monitor water mains.

4. Consider implementation of an automated metering system to reduce transcription errors and to identify high water usages.

5. Consider installing flow meters in different zones of the system to monitor usage and leaks.

When responding to customer calls of high water usage, the Utility shall provide guidelines to the customer about meter reading and leak repair of the customer line unless there is information given to make us believe that there may be a problem with the main or service line. If the information is available, Fiscal can provide a summary of past water usages in the last year for the customer. If the customer does not find indications of a problem on the customer line, they can request a Service Call. When a Work Order is issued, Utility staff will investigate. If the findings show a problem on the customer line, the customer will be notified. If the findings show a problem on the service line, the customer will be credited for the Service Call fee.

MAINTENANCE

WTP SYSTEM MAINTENANCE

GOAL: Operate and maintain the WTP system efficiently to provide quality potable water.

Follow the maintenance procedures and schedules for the plant as outlined in Appendix H.

Follow the maintenance procedures and schedules for the Trimite TR-100A water treatment facility as outlined in the O&M Manual, "City of Vader WTF, Vader, Washington, Project No. 200142" prepared by US Filter, Sturbridge, MA.

CLEARWELL MAINTENANCE

GOAL: Maintain the clearwell for increased longevity.

The clearwell is a concrete storage vault 29' long x 20'4" wide x 14' high with a capacity of 60,000 gallons. Baffle walls and perforated piping were constructed in 1993 to provide minimum contact time for the finished water.

Pressure transducers in the clearwell control the plant operation. These are set as shown.

- 11.5 ft turns on the intake booster pump.
- 13.0 ft turns off the intake booster pump.
- 14.0 ft is the high water alarm.
- 8.0 ft is the low water alarm.

Public Works retained Reliable Diving to conduct an inspection on July 17, 2013. We believe this was the first interior inspection of the clearwell since the multi-media filter system was constructed in the Plant in 2002. The clearwell and baffles are in good shape.

STORAGE RESERVOIR MAINTENANCE

GOAL: Maintain the reservoir for increased longevity.

The storage reservoir is a 55 ft diameter (15' high) bolted steel 250,000 gallon tank. To the County's knowledge, the tank was last painted and inspected when the reservoir was constructed in 1979. State DOH did an inspection in 2009.

Public Works did an informal inspection of the tank interior in May 2011. Clarity was good and little siltation was noted at the bottom. Reliable Diving inspected the reservoir on July 17, 2013. Recoating of the interior is advisable. Public Works is

INTAKE STRUCTURE MAINTENANCE

GOAL: Secure and keep the Intake facility and grounds neat and clean for a safe operating environment.

The intake pump is activated by floats in the intake clearwell. The clearwell levels at the Plant activate the booster pump by telephone, 360-295-3539.

1. Gate at SR 506 is secured, signed and vegetation at the approach is cleared for adequate sight distance.

2. Vegetation is cleared from the driveway (5' to 6' away from edge of gravel) and around the intake structure area.

3. Road surface of driveway is maintained (compacted, no potholes) for Utility vehicles.

4. Fencing is secured around the Intake building.

5. Intake building is secured and exterior of building is maintained (paint in good shape, ground is mowed, gravel is smoothed and firm, roof & siding is in good shape, door opens & shuts properly, etc.)

6. Interior of building is good (lights work, heater and fan works, no large water mess, cover on wetwell access, no bird or animal entry, keys in place, instruction/notification posters are intact, etc.)

7. Inspect intake pump and structure. Clear the intake using an air compressor.

8. Inspect and ensure the gate valve covers can be opened.

9. Inspect and ensure the gate valves are operable annually. This must be done when the system is offline.

WTP FACILITY & GROUNDS MAINTENANCE

GOAL: Keep the WTP facility and grounds neat and clean for a safe operating environment; and to instill public confidence in the potable water system.

1. Ensure gate and fences around the WTP facilities are secured (posts are upright, fencing is upright).

2. Clear vegetation from the approach and S. Military Road to maintain adequate sight distance.

3. Keep grass mowed.

4. Clear and keep bushes, blackberry vines and other shrubbery down.

5. Keep driveway, main entry and loading area clear.

6. Maintain exterior of buildings including roof and gutters. Gutters should be cleaned regularly. Downspouts should discharge away from the building. Doors should open and close smoothly. Roof should be clear of moss, and may be inspected by Facilities or Public Works. Protect and paint exterior surfaces.

7. Clear vegetation around the building to minimize moisture and vermin.

8. Avoid storing materials next to the buildings.

9. Ensure lights, signs, monitoring and other equipment are in working condition.

10. Monitor and clear the material from the backwash lagoons. Apply a bonding agent on the floor and sides of the lagoons on a regular schedule.

11. Inspect, install, clean, repair and replace needed safety items (i.e., signs, fire extinguishers, safety painted areas, mats, vents, heaters).

12. Inspect and install improvements to keep facilities (WTP, Intake bldg., storage shed) clean and dry.

13. Set out trash and recyclables on scheduled pickup days; and coordinate with Area 3 for heavy debris loads.

14. Keep, organize and maintain inventory of equipment, meters, parts, and laboratory inside the WTP building.

VEHICLE MAINTENANCE

GOAL: Keep vehicle operational and stocked to efficiently and adequately respond to callouts and site inspections.

1. Keep interior of utility vehicle clean and neat.

2. Ensure vehicle has proper forms and tools to respond efficiently to most callouts. To deter vandalism, tools should be stored inside the locked plant after hours.

3. Follow scheduled maintenance of the Follow scheduled maintenance of the vehicle (i.e., oil changes, tire pressure, brakes, regularly scheduled maintenance) with Motor Pool.

SERVICE CONNECTIONS MAINTENANCE

GOAL: Ensure water service connections that are the responsibility of the Utility are properly maintained.

1. Replace missing or damaged meter boxes and lids.

2. Note and forward to Engineering the location of any new and replaced line work, valves, hydrants, and connections.

3. Inspect, clean and improve the interior of meter boxes to enable ease and access for meter reading. Start a program for regular inspection.

4. Obtain easements or relocate boxes that are outside of the public right of way.

5. Inspect and exercise valves in the water system to ensure smooth operation and to identify replacement valves on an annual basis.

6. Flush, exercise and measure flow of hydrants on a semi-annual basis.

7. Clear vegetation and if needed, repair or install new location markers for meter boxes, valves and hydrants in the public right of way. Position markers in accordance with county or applicable city standards.

ADMINISTRATION

CUSTOMER ACCOUNT

Regular Fiscal Window Hours: 8:30 AM to 4:00 PM, Monday to Friday. Normal Operation Hours: 8:00 AM to 2:00 PM, Monday to Friday. Normal Operation Hours for Shut Off Days: 9:00 AM to 5:00 PM. Fiscal Contacts: Kay, Brenda, Carma PW Contacts: Lanette, Shirley

1. New Customer/New Account

- Customer comes into the Fiscal Office to complete the application and water use questionnaire. Customer will be required to provide the following information:
  Owners: Proof of ownership. Please give them the Owner's Letter.
  (Located: Y:Vader\Vader\Owner's List|Tim's Letter to Owners)
  Commercial: Proof of ownership or Lease Agreement
  Tenants: Rental Agreement
- Update Owner Spdhst: Y:\Vader\Owner List\Owner List for Vader.xlsx
- Account will be for the tenant identified on the lease. Government issued picture ID for all
- Customer pays deposit, turn on meter, and meter installation (if applicable) fees. Acceptable payment is by check, cash, credit/debit card or money order.
- Fiscal reviews the application to verify that all information is complete and correct.
- Fiscal enters information into the ASP and sets up a new account.
- Fiscal verifies the sewer account is open with the City of Vader.
- Fiscal completes a work order and emails this to PW the same day.
- PW will turn on water. Tentatively a 48 hour turnaround.
- PW will complete the information on the work order.
- PW will scan a copy and email back to Fiscal.
- Fiscal will keep the account information in a physical file folder.

2. Customer leaves as Owner – Foreclosure & Abandonment

- Customer (owner) notifies the Fiscal Office.
- Fiscal completes a work order and emails this to PW the same day.
- PW takes reading on the last day, removes meter, and follows work order instructions.
- PW emails the completed work order to Fiscal.
- Fiscal emails the final reading to the City of Vader.
- Fiscal bills customer, and, if applicable, refunds deposit within 30 days of receiving payment.
- Fiscal closes account. (Follow ASP process for closing account in system.)
- If there is a balance due, Fiscal will process a property lien to ensure that new owner will pay the past due balance. We cannot place a lien for more than four months' balance past due. (RCW 35.21.290) Property lien shall also include a meter installation fee to ensure a connection for the new owner.
- The lien process is located: Procedures\Processing a Property Lien for Vader Water Systems.docx
- Fiscal will contact the Hearing Examiner if the Customer appeals in writing to the Fiscal Office.
- Fiscal will establish a new account for the new Owner/Bank using Scenario #1.

- If realtor needs temporary water access, Fiscal will charge a turn on fee and send work order to PW.
  - If water service is needed more than three business days, then they will be considered a new customer. Fiscal will follow the guidelines for Scenario #1.
- Fiscal will Update Spreadsheet: Y:\Vader\Vader Accounts Base Rate Foreclosure.xlsx

3. **Customer leaves as Owner – Sale of Property**
   - Customer (owner) notifies the Fiscal Office.
   - Fiscal gives Customer the following options:
     - No change by Customer and Customer pays base rate of $87. (Water meter can be locked or unlocked Customer's request).
     - Close Customer's account, remove meter, and bill the New Owner the $300 reinstallation fee. (This ensures a water connection) No additional turn on fee is charged.
     - Short term rate for up to one year with the meter locked. Customer will pay 67% of the base rate charges monthly ($29.15) and the turn on fee.
     - Close Customer's account and remove the meter. Customer is not charged anything. This option does not guarantee a connection. PW will record a Notice of No Connection that will be attached to the property title.
   - Fiscal completes a work order and emails this to PW the same day.
   - PW takes reading on the last day and follows work order instructions.
   - PW emails the completed work order to Fiscal.
   - Fiscal emails the final reading to the City of Vader.
   - Fiscal bills customer, and, if applicable, refunds deposit within 30 days of receiving payment.
   - Fiscal closes account. (follow ASP process for closing acct in system)
   - If realtor needs temporary water access, Fiscal will charge a turn on fee and send a work order to PW.
     - If the realtor needs more than three business days, then they will be considered a new customer and follow the guidelines for Scenario #1.

4. **Customer leaves as Renter**
   - Customer (renter) notifies the Fiscal Office.
   - Fiscal completes a work order and emails this to PW the same day.
   - PW takes reading on the last day, locks meter, and follows work order instructions.
   - PW emails the completed work order to Fiscal.
   - Fiscal bills Customer, and, if applicable, refunds deposit within 30 days of receiving payment.
   - Fiscal closes account. (Follow ASP process for closing acct in system)
   - Fiscal emails the final reading to the City of Vader.
   - Fiscal contacts Owner to inform renter is gone and begins billing Owner for base charges.
     - Note: Owner can choose any of the options outlined in Scenario #3.

5. **Customer leaves as Renter with an unpaid balance**
   - Fiscal completes a work order & emails to PW the same day.
   - PW takes reading, locks the meter, and follows work order instructions.
   - PW emails the completed work order to Fiscal Office.
   - Fiscal bills Owner and Customer (renter).
   - Fiscal provides notice with Owner's bill that the account is in Owner's name and they are liable for any incurred charges according to Section 13.80.100 & 13.80.500 LCC.

- http://www.codepublishing.com/wa/lewiscounty/
- Fiscal proceeds with collections process if Owner does not pay.

6. **Customer leaves and applies for new water service within service area**
   - Fiscal gets payment status and water service account information at the last service address.
   - If water service at the last service address was paid by the Owner or Customer, prior account is in good standing, and there is low risk to the Utility by providing new service, then Fiscal proceeds to set up account using guidelines in Scenario #1.
   - If water service at the last service address was paid by the Customer, prior account charges are past due, and there is a high risk to the Utility by providing service, then: Service is denied until fees and charges for last service address are paid, or service may be provided if the new account is established under the Owner's (landlord) name.

7. **Customer will be away up to 12 months**
   - Customer notifies the Fiscal Office.
   - Fiscal gives Customer the following options:
     - No change by Customer and Customer pays base rate of $87. (Water meter can be locked or unlocked per Customer's request).
     - Close Customer's account, remove meter and bill Customer the $300 reinstallation fee upon their return. (This ensures a water connection) No additional turn on fee needed.
     - Short term rate for up to one year with the meter locked. Customer will pay 67% of the base rate charges monthly ($29.15) and the turn on fee.
     - Close Customer's account and remove the meter. Customer is not charged anything. This option does not guarantee a connection. PW will record a Notice of No Connection that will be attached to the property title.
   - Fiscal completes a work order and emails this to PW on the same day.
   - PW takes reading on the last day, and follows work order instructions.
   - PW emails the completed work order to Fiscal.
   - Fiscal bills customer and follows procedures for the option requested by the Customer.

8. **Customer wants service after normal working hours**
   - Fiscal informs customer of:
     - Normal working hours (See Summary box on first sheet of this section).
     - Response time may take up to 48 hours or two business days to turn water service back on after payment and request is made by the customer.
     - Option for service outside of normal working hours and the applicable fees (service and overhead) and costs. (Refer to latest Schedule of Fees and 13.80.430 and 13.80.480 LCC.)
   - Fiscal immediately notifies PW via telephone and issues a work order to follow.
   - PW follows work order instructions.
   - PW emails the completed work order to Fiscal.
   - Fiscal bills customer immediately.

9. **Customer tampers with lock or meter, and other unauthorized actions.**
   - PW locks meter immediately.
   - PW sends a certified letter with a warning to the Owner and Customer at the service address that their action is a violation of Section 13.80.100(17) LCC and RCW 9A.61.020. The letter shall outline remedial steps and timeline to be taken by the violator.

- If remediation is not undertaken by the violator PW will remove the meter, notify Fiscal to close the account (if applicable) and proceed with county procedures to levy penalties and charges on the property according to Section 13.80.120 LCC.

10. Customer moves out, but house is occupied by others.

- Fiscal completes a work order and emails this to PW on the same day.
- PW takes a reading, notifies occupant(s) with a door hanger to establish a new account, and follows work order instructions.
- PW emails the completed work order to Fiscal.
- If new account is not set up in 3 business days, Fiscal will issue a work order to remove the meter, and email this to PW. PW takes a reading, removes meter and follows work order instructions.
- PW emails the completed work order to Fiscal.

11. Leaks.

- Please see the Standard Operating Procedures for Leaks: Y:\Vader\Procedures\Guidelines for handling leak calls 040412.docx

12. Purchase of property that has a property lien from Lewis County

- If the property is being purchased through an agent and a title company is involved, Fiscal will ask LC Civil Prosecuting Attorney Office to view their Escrow Instructions to ensure that Lewis County is a signatory. Once approved, Lewis County Fiscal can fill out a *Notice of Satisfaction of Lien* for the Escrow Company, prior to payment.
- If an individual would like to pay the property lien in person, they must submit the full payment of the property lien to the Fiscal Office. Fiscal will prepare the Notice of Satisfaction of Lien and have it notarized. Fiscal will give the paid purchaser the document and they will process it through the Treasurer's Office and the purchaser will pay the recording fees.
- If a bank would like temporary water on to show or clean the home, they do NOT have to pay off the lien, they follow the instructions in Scenario#2.

13. Deceased clients

- If we receive notice from the family or estate, Fiscal will update the account.

If we receive notice from an obituary or notice of Estate Sale, Fiscal will put that information into the "Deceased Clients" Folder. No changes to the account will be initiated until the water bill becomes delinquent or if we are notified by the family or estate. Fiscal will also update their Vader account spreadsheet, spreadsheet.

WATER USAGE FROM FIRE PROTECTION FACILITIES

Use of water from a fire protection facility must be approved by the Utility and in accordance with WAC 246-290-490. Approval of use by the Administrator shall have the following conditions:

- Location(s) of hydrants and withdrawal points
- Means of determining usage volumes
- Duration of usage period
- Type of approved double check valve assembly, air gap or assembly to avoid cross contamination
- Maximum volume of water withdrawal
- Hours of withdrawal operation
- Attendance by Utility personnel.

1. The Fiscal Billing Office (Fiscal):
   - Processes application as new Commercial Account. The Customer will be required to provide information about type and method of water withdrawal methods so as to protect public water system from contamination.
   - Forwards application packet to Public Works for approval.

2. Public Works:
   - Reviews application to ensure conditions listed above are met.
   - Approves location of fire hydrant to be used for filling. (Hydrant should be located at the end of the water main such as the hydrant at 6th St/RR tracks.)
   - Scans file for Public Works records.
   - Forwards application packet back to Fiscal.
   - Utility Operations staff notes usage volume to Engineering and Fiscal.

3. Fiscal:
   - Processes approved application with commercial account deposit.
   - Charges fees as established in Title 13 LCC and the current fee schedule for the Utility. Applies base rate throughout usage period.
   - Enters usage volumes into VWS database when reported by Public Works.
   - If withdrawal is done after normal working hours, then apply Service Call Charge, staff's labor and vehicle charges, and overhead rate for staff labor and vehicle charges.
   - Invoices customer monthly or when term of use is complete.
   - Closes account and processes deposit according to Fiscal procedures.

WAIVER OF FEES

Waiver of Fees may be granted for the following reasons:

1. "Forgive" late fee due to an unforeseen circumstance which has delayed payment.
2. Adjustment for leaks repaired by the Utility or customer in good standing.
3. Incidental cases as approved by the Administrator.

Conditions of fee waivers and bill adjustments are:

1. Granted to customers in good standing with at least one year of water service.
2. Usually granted to customers once per 12 month period.
3. Made at the Administrator's discretion.

1. The Fiscal Billing Office (Fiscal):

- Receives request for help from customer and forwards application to customer for completion. When completed application is returned to Fiscal, verifies information on application and attaches account history of prior year.
- Determines if request is straightforward and if so, approves and enters findings into their records as an "Administrative" action.
- If request involves further issues, forwards to Administrator at PW with attaches account history.

2. The Administrator at PW:

- Reviews application packet and determines if request is justified.
- Signs and dates application for Utility and notes amount of waiver and effective date if approved.
- Scans (copies) file for Public Works records.
- Forwards original application and documentation back to Fiscal Billing Office.

3. Fiscal:

- Enters findings into their records.
- If approved, adjusts the bill.
- Notifies customer and places in customer file.

HIGH WATER USAGE COMPLAINTS

The Guidelines below pertain to complaints generated by customers as a result of high usage reported on their water bills.
Calls reporting visible leaks at meters, fire hydrants, valves, etc. shall be immediately referred to Public Works. See Emergency Contact notify list on "Who does what?"
Section 13.80.430 states that the minimum charge (which includes travel time) for service calls shall be applied. Section 13.80.440 states that customer pays for all charges.

1. Fiscal:
   - Receives customer complaint about high usage or possible leak.
   - Reviews account with customer to determine if usage is high as compared to 3 year historical data.
   - Refers concern to Public Works (with customer's phone number and mailing address) by email if customer is not satisfied and still feels there may be a "leak" or problem with the meter. Fiscal attaches 3 year historical usage data to the email. Email to Lanette. CC: Shirley, Carma and Kay.
   - If Customer is requesting waiver of charges, they will need to fill out (or completes while on the telephone, Accounting Department can sign per customer) the Consideration for Waiver of Fees or Charges Form.

2. Public Works:
   - Reviews historical usage and meter service history.
   - Generates work order for WTPO if needed.

3. Operations/WTPO:
   - Inspects meter and reports findings back to Public Works and Fiscal.
   - Discusses findings with customer, if available.
   - Repairs or replaces meter, if warranted.
   - Completes work order with meter readings and summary of follow-up actions.
   - Forwards completed work order to PW.

4. Public Works:
   - Calls Customer with findings.
   - Sends letter to customer advising them of the findings, including the 3 year historical usage graph and plan of action the county will take, if any. Letter will include advice to call plumber if necessary and reminder that the county does not perform plumbing or construction work to fix leaks; and additional visits to troubleshoot the meter may entail a $25 or $75 (after hours) service call plus labor costs for employee.
   - If Customer generates additional service call/work order, inform Fiscal. Fiscal will invoice customer for applicable charges generated by this work order.
   - Scans correspondence and cc's Fiscal.
   - Logs work order into the "Work Orders" and "Problems" spreadsheets. (*The latter worksheet is used to identify potential water main problems based on recurring complaints.)*

LOW-INCOME SENIOR and TOTALLY DISABLED RATE APPLICATIONS

Lewis County Code Section 13.80.460 Charges for Low-Income Senior Citizen Customers:

(1) The fixed rates for low-income senior citizen residential customers and low-income totally disabled residential customers shall be one-half (50 percent) of the residential base charge that would otherwise apply. All consumption shall be as for residential customers as set forth in this chapter.

(2) All low-income senior citizen residential customers and low-income totally disabled residential customers applying for low-income senior citizen customer or totally disabled residential customer rates herein provided shall furnish a claim for exemption in such affidavit form as shall be prescribed by the Administrator. Such form shall be furnished on or before January 31 of each year, within 30 days from the date of account opening, or unexpected sudden change of income status. The Utility may request that all or some requests be renewed annually by the Customer.

1. The Fiscal Billing Office (Fiscal):
   - Helps applicant complete customer part of application.
   - Verifies documentation requested on the application, attaches copies as applicable, and signs ID and Income verification section.
   - Forwards application to the Administrator (Public Works} for consideration.

2. Public Works:
   - Reviews application packet, and determines if the applicant meets the criteria:

Lewis County Code Section 13.10:

Low income senior citizen customer shall mean a person who is 62 years of age or older and whose total income, including that of his or her spouse or co-tenant, does not exceed the one-person, low income figure for Community Development Block Grant (CDBG) projects.

Totally disabled customer shall mean any person who has been classified as totally disabled by the Social Security Administration and whose total income does not exceed the amount provided for low-income senior citizen customers.

   - Signs and dates application for Utility and notes "effective" and sunset dates.
   - Scans (copies) file for Public Works records, with social security info redacted.
   - Forwards original application and documentation back to Fiscal.
   - Sends letter to applicant advising of approval, effective and sunset dates.
   - Monitors approved applications for renewal prior to expiration date.

3. Fiscal:
   - Enters findings into their records.
   - If approved, adjusts the bills.
   - Notifies customer of expiring exemption.

COLLECTIONS

Ordinance 1221, Section 13.80.300, LCC-Customer Deposit, Section 13.80.400, LCC-Customer Charges and Section 13.80.500 Method of Billing and Payment.

Also see Client Service Agreement between Fairway Collections and Lewis County effective 2-9-12. Procedures as outlined in the Feb 9, 2012 meeting with Greg Luhn are included below. Verified document with Greg Luhn on May 21, 2012.

1. If payment by water customer is not received in full within 3 business days from the date of the door hanger, Fiscal will send a Shut Off List to Public Works. Public Works will then lock meters and complete a meter reading. These accounts are still considered "active." Fiscal will notify every owner of the delinquent customer tenant and send a copy of the notification letters to Public Works.

2. Fiscal sends a shut off list of property owners to Fairway Collections through their online website. *These accounts are currently known as Fiscal's "shut off" list – they are already approximately 3 weeks past due.* Fairway provides detailed acknowledgement of the accounts to Fiscal within three working days.

    a. Fiscal sends notice, by email, to Public Works when account(s) are being turned over to collections.

3. Fairway immediately sends "pre-collection" letter advising the customer of 30 days to remit the debt to Lewis County. Fiscal receives a copy of that letter from Fairway for their files. If debt is disputed, Fairway and Fiscal review the account documentation. Fiscal keeps an updated list of the past due accounts and when 30 day window for payment is due. When a payment is made, Fiscal will notify Fairway and Public Works.

    a. If account is not paid by the 31st day after tbe account is turned over to Fairway, *Fairway notifies Fiscal to review the list to determine that all accounts are still delinquent.*
    b. Fairway adds 40% to the debt to cover their fees and starts the collection process.
    c. Fiscal will continue to bill base rate charges.
    d. If no payment after 75 days from the time Fiscal turns the account over to collections, the debt goes to credit reporting. Fairway will notify Fiscal when this is done.
    e. Fiscal/PW will consider the option of a property lien at this time. This will be done outside of the collection process.

4. On the 31st day, Fiscal sends work order to Public Works to remove service meter for non-payment of debt. The account is now considered "closed".

    a. Public Works emails work order "door hanger notice" to the Water Utility Operator and Area 3-VWS Supervisor. Water Utility Operator attaches the 'WATER METER REMOVAL" door hanger to the residence at least three business days prior to the removal.

    b. Water Utility Operator notes meter removals and readings on work order form and forwards a copy to Fiscal.

c. If there is any usage or base rate charges from the date of the last bill (when the shut off notice was completed), Fiscal will invoice the customer for this amount, less any deposit, and email Greg Luhn at the Collection Company.

d. If owner wishes to have meter replaced and has paid all outstanding charges, we will use the same account number to keep the customer history, but new account charges will apply. These charges include a new deposit, re-installation fees and the meter turn on fee.

PROPERTY LIEN (While in receivership)

> Following the guidelines for liens in RCW 35.21.217,
> (http://www.mrsc.org/subjects/pubworks/utilbill/collect.aspx#utility)

1. Fiscal will process the **bimonthly billing** in ASP to complete the first step of getting a customer ready to do a property lien:

   - Clearly identify billing and due dates on the utility bill.
   - Note on the utility bill or in a customer letter that charges remaining unpaid after a specified number of days of the billing or due date (30 days is the average used by cities) will be considered delinquent and subject to interest and penalties.

2. When payment is not met, Fiscal will process the **Delinquent Statements**:

   - Provide notice that if delinquent charges are not paid within a specified number of days from the due date (10 days is the average), water service will be discontinued and shut off at the meter (also identify pertinent municipal code or ordinance provisions).
   - Mail notice of delinquency as soon as an account becomes delinquent.

4. If payment is still not made by the 22nd of the month following the billing, a **door hanger** will be issued. If the property owner has not responded within 3 business days, Fiscal will send a Work Order to Public Works and the **water will be shut off**. Fiscal will bill the owner's account for the door hanger charge.

4. Fiscal will then mail a CERTIFIED letter to the property owner that will include the following:

   - Include in the notice a statement of the utility's procedures regarding termination of service, including notice of hearing rights, deferred or budget payment availability, penalties, interest, and any additional charges for reestablishing service.
   - Notify delinquent customers that termination of service does not relieve them of the obligation to pay all outstanding bills and charges;
   - Customers should also be notified that before service can be resumed, all outstanding bills and charges, including a water turn on charge, must be brought current and that an additional deposit may be required.

5. Fiscal will search on the Auditor's Online Records to see status of the property. https://quickdocs.lewiscountywa.gov/recorder/web. Click "I acknowledge" which sends you to "Document Search" page. Search by property owner's last name. Enter the name under "Grantee". Click on search. Click on Grantee's name and view attachment on the left side under "Document Images." (You may have to try under Grantor, as well).

   - If these conditions apply, you CANNOT process a property lien and will have to use our Collections process:
     i. If the property is in foreclosure or default.
     ii. If the property owner has done a Quit Claim Deed to another person.

Searching for property transfers, liens, foreclosures on Auditor's Online Records…

1. On the Lewis County website, click on Auditor's Online Records: https://quickdocs.lewiscountywa.gov/recorder/web/

2. Click "I acknowledge" which sends you to "Document Search" page.

3. Specify the search parameters in "Recording dates", and then click on "Advanced" criteria.

4. Fill in Section, Township and Range – this will help you find that information: http://maps.lewiscountywa.gov/maps/AsrParcMaps.html

All documents recorded during that time period will be shown; parcel number will be noted on the document. If you need to research more than one parcel, just hit "back" and change it.

For Vader Water Utility's service area, search Sections 28, 29, 32 & 33, Township 11, Range 2W.

Searching for Utility Notification Center Locates

1. Log onto this website: http://www.managetickets.com/

2. Click on the "Search and Status" box in the middle of the page.

3. Click on WA in the "Select a State" dropdown box.

4. On the next data page, enter the date search parameters at the top.

5. Skip down to the "Location Information" section and click on Lewis County, enter the city – Vader, and other specific detail as needed such as street and location.

6. Click on the "Search" tab at the lower left bottom of the page.

For other locate selections and information, the main website is:
http://www.callbeforeyoudig.org/

Revised 7-1-16

APPENDIX K

Amortization schedules for contract loans

Combined Amortization Schedule for Contract Num: DM10-952-005

Contractor Name: Lewis Co Public Works

Project Name: City of Vader Water Distribution Systems Improveme

Total Loan Principal: $357,337.50

Accrual Start Date:

Paid Off:

First Payment Date: 10/1/2011

Loan Start Date: 4/21/2011

Last Payment Date: 10/1/2044

Amortization Schedule

Pmt Due Date	Principal	Accrued Interest	Interest	Payment Due	Loan Balance
10/1/2011	$0.00	$0.00	$0.00	$0.00	$0.00
10/1/2012	$0.00	$752.60	$0.00	$0.00	$108,905.80
10/1/2013	$0.00	$2,561.35	$0.00	$0.00	$340,156.09
10/1/2014	$0.00	$3,413.78	$0.00	$0.00	$343,168.96
10/1/2015	$11,438.95	$3,431.69	$10,159.42	$21,598.37	$331,730.01
10/1/2016	$11,927.52	$3,447.99	$3,447.99	$15,375.51	$333,971.02
10/1/2017	$11,927.53	$3,339.74	$3,339.74	$15,267.27	$322,043.49
10/1/2018	$11,927.52	$3,220.43	$3,220.43	$15,147.95	$310,115.97
10/1/2019	$11,927.54	$3,101.17	$3,101.17	$15,028.71	$298,188.43
10/1/2020	$11,927.52	$2,981.87	$2,981.87	$14,909.39	$286,260.91
10/1/2021	$11,927.52	$2,862.60	$2,862.60	$14,790.12	$274,333.39
10/1/2022	$11,927.55	$2,743.34	$2,743.34	$14,670.89	$262,405.84
10/1/2023	$11,927.53	$2,624.07	$2,624.07	$14,551.60	$250,478.31
10/1/2024	$11,927.55	$2,504.77	$2,504.77	$14,432.32	$238,550.76
10/1/2025	$11,927.54	$2,385.51	$2,385.51	$14,313.05	$226,623.22
10/1/2026	$11,927.54	$2,266.23	$2,266.23	$14,193.77	$214,695.68
10/1/2027	$11,927.52	$2,146.97	$2,146.97	$14,074.49	$202,768.16
10/1/2028	$11,927.58	$2,027.69	$2,027.69	$13,955.27	$190,840.58
10/1/2029	$11,927.52	$1,908.41	$1,908.41	$13,835.93	$178,913.06
10/1/2030	$11,927.57	$1,789.14	$1,789.14	$13,716.71	$166,985.49
10/1/2031	$11,927.55	$1,669.87	$1,669.87	$13,597.42	$155,057.94
10/1/2032	$11,927.53	$1,550.57	$1,550.57	$13,478.10	$143,130.41
10/1/2033	$11,927.50	$1,431.29	$1,431.29	$13,358.79	$131,202.91
10/1/2034	$11,927.58	$1,312.03	$1,312.03	$13,239.61	$119,275.33
10/1/2035	$11,927.54	$1,192.75	$1,192.75	$13,120.29	$107,347.79
10/1/2036	$11,927.53	$1,073.48	$1,073.48	$13,001.01	$95,420.26
10/1/2037	$11,927.51	$954.22	$954.22	$12,881.73	$83,492.75
10/1/2038	$11,927.56	$834.91	$834.91	$12,762.47	$71,565.19
10/1/2039	$11,927.50	$715.65	$715.65	$12,643.15	$59,637.69
10/1/2040	$11,927.57	$596.38	$596.38	$12,523.95	$47,710.12
10/1/2041	$11,927.50	$477.09	$477.09	$12,404.59	$35,782.62
10/1/2042	$11,927.56	$357.83	$357.83	$12,285.39	$23,855.06
10/1/2043	$11,927.50	$238.56	$238.56	$12,166.06	$11,927.56
10/1/2044	$11,927.56	$119.25	$119.25	$12,046.81	$0.00
Totals:	$357,337.49	$62,033.23	$62,033.23	$419,370.72	

RECEIVED
NOV 19 2015
LC PUBLIC WORKS

Amortization Schedule for Contract Num: 00-65120-034

Contractor Name: VADER, CITY OF
Project Name: Water Treatment Plant Upgrade and Raw Water Improv
Loan Information: Loan# 1

Loan Amount: $859,538.58
Interest Rate/Type: 1.5000 % (Simple)
Amortized Loan Fee: 0.0000 %
Payment Frequency: Annual - 360 Days
Periods Principal Deferred: 2
Draw Based Loan: Yes

Loan Type: Amortizing Loan
Loan Term: 30 Years
Amortization Term: 29 Years
Paid Off:
Loan Source: DWSRF
Terminated Date:

Loan Start Date: 10/1/2000
Accrual Start Date:
First Payment Date: 10/1/2001
Last Payment Date: 10/1/2030
Distressed Community: N/A
Subordination Allowed: N/A

Amortization Schedule

Pmt #	Pmt Due Date	Principal	Accrued Interest	Interest	Payment Due	Loan Balance	Invoice Date	Inv#	Paid Date	Paid Amt	Extra Principal Paid Date	Extra Principal Paid Amt
1	10/1/2001	$0.00	$0.00	$0.00	$0.00	$0.00	10/01/2001	77058				
2	10/1/2002	$0.00	$6,887.09	$6,887.09	$6,887.09	$783,767.28	05/30/2002	77059	09/20/2002	$6,887.09		
3	10/1/2003	$45,238.87	$12,542.37	$12,542.37	$57,781.24	$814,299.71	05/30/2003	77060	09/24/2003	$57,781.24		
4	10/1/2004	$45,238.88	$12,214.51	$12,214.51	$57,453.39	$769,060.83	05/30/2004	77061	09/20/2004	$57,453.39		
5	10/1/2005	$45,238.88	$11,535.92	$11,535.92	$56,774.80	$723,821.95	05/30/2005	77062	09/26/2005	$56,774.80		
6	10/1/2006	$45,238.88	$10,857.32	$10,857.32	$56,096.20	$678,583.07	05/30/2006	77063	10/31/2006	$56,096.20		
7	10/1/2007	$45,238.85	$10,181.41	$10,181.41	$55,420.26	$633,344.22	10/01/2007	77064	10/29/2007	$55,420.26		
8	10/1/2008	$45,238.88	$9,500.16	$9,500.16	$54,739.04	$588,105.34	10/01/2008	77065	11/03/2008	$54,739.04		
11	10/1/2011	$29,405.27	$8,821.58	$22,496.81	$51,902.08	$554,732.14	08/31/2011	77079	10/04/2011	$51,902.08		
12	10/1/2012	$29,196.43	$8,320.98	$8,320.98	$37,517.41	$525,535.71	09/04/2012	140045	10/18/2012	$37,517.41		
13	10/1/2013	$29,196.43	$7,883.04	$7,883.04	$37,079.47	$496,339.28	08/28/2013	140046				
14	10/1/2014	$29,196.43	$7,445.09	$7,445.09	$36,641.52	$467,142.85						
15	10/1/2015	$29,196.43	$7,007.14	$7,007.14	$36,203.57	$437,946.42						
16	10/1/2016	$29,196.43	$6,569.20	$6,569.20	$35,765.63	$408,749.99						
17	10/1/2017	$29,196.43	$6,131.25	$6,131.25	$35,327.68	$379,553.56						
18	10/1/2018	$29,196.43	$5,693.30	$5,693.30	$34,889.73	$350,357.13						
19	10/1/2019	$29,196.43	$5,255.36	$5,255.36	$34,451.79	$321,160.70						
20	10/1/2020	$29,196.43	$4,817.41	$4,817.41	$34,013.84	$291,964.27						
21	10/1/2021	$29,196.43	$4,379.46	$4,379.46	$33,575.89	$262,767.84						
22	10/1/2022	$29,196.43	$3,941.52	$3,941.52	$33,137.95	$233,571.41						

Pmt #	Pmt Due Date	Principal	Accrued Interest	Interest	Payment Due	Loan Balance	Invoice Date	Inv#	Paid Date	Paid Amt	Extra Principal Paid Date	Extra Principal Paid Amt
23	10/1/2023	$29,196.43	$3,503.57	$3,503.57	$32,700.00	$204,374.98						
24	10/1/2024	$29,196.43	$3,065.62	$3,065.62	$32,262.05	$175,178.55						
25	10/1/2025	$29,196.42	$2,627.68	$2,627.68	$31,824.10	$145,982.13						
26	10/1/2026	$29,196.43	$2,189.73	$2,189.73	$31,386.16	$116,785.70						
27	10/1/2027	$29,196.42	$1,751.79	$1,751.79	$30,948.21	$87,589.28						
28	10/1/2028	$29,196.43	$1,313.84	$1,313.84	$30,510.27	$58,392.85						
29	10/1/2029	$29,196.42	$875.89	$875.89	$30,072.31	$29,196.43						
30	10/1/2030	$29,196.43	$437.95	$437.95	$29,634.38	$0.00						
	Totals:	$855,570.65	$165,750.18	$179,425.41	$1,034,996.06					$434,571.51		