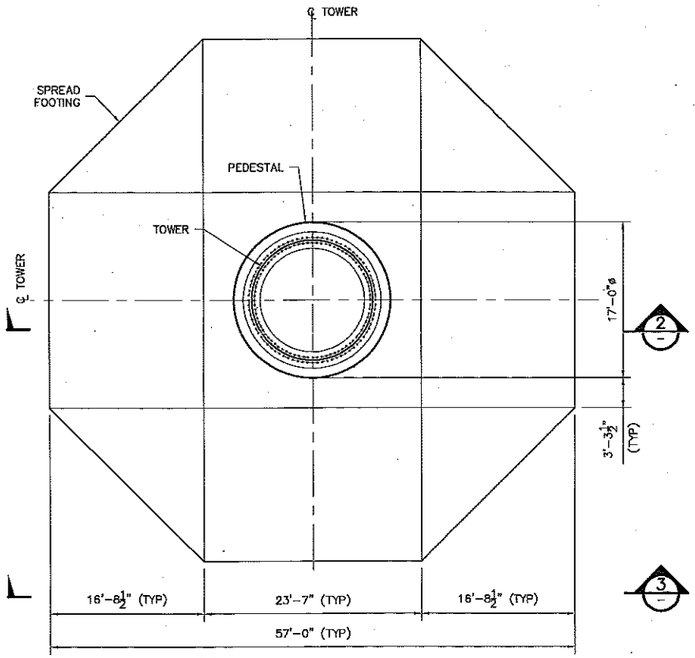

1 PLAN: TOWER FOUNDATION
1/8"=1'-0"
0 1 5 10
SCALE IN FEET

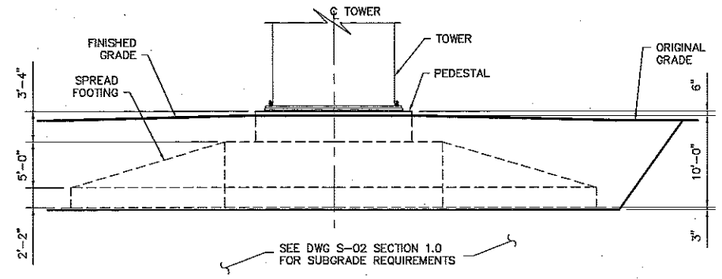

3 ELEVATION: TOWER FOUNDATION
1/8"=1'-0"
0 1 5 10
SCALE IN FEET

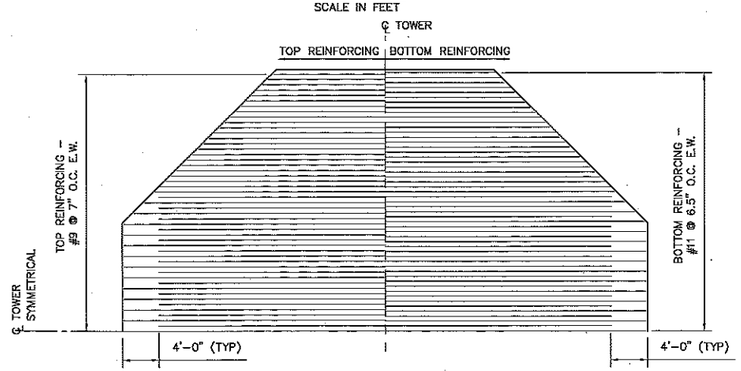

4 DETAIL: REINFORCEMENT CUTOFFS
1/8"=1'-0"
0 1 5 10
SCALE IN FEET

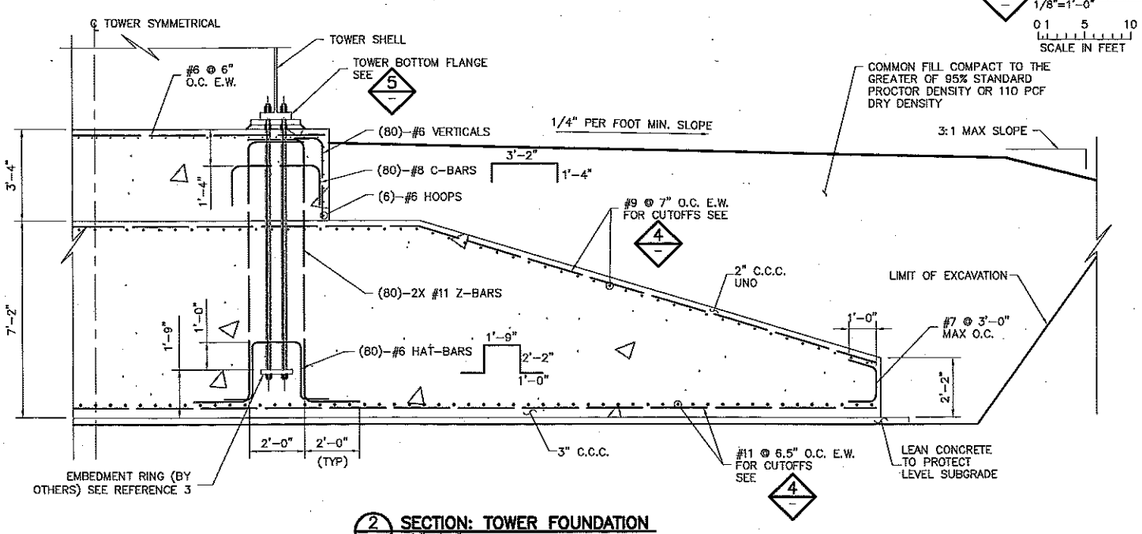

2 SECTION: TOWER FOUNDATION
3/8"=1'-0"
0 2 4 6
SCALE IN FEET

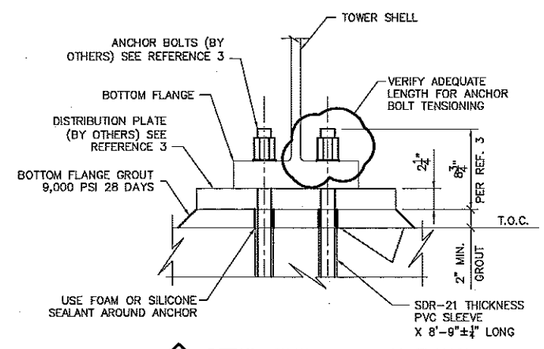

5 DETAIL: TOWER BOTTOM FLANGE
1 1/2"=1'-0"
0 3" 6" 9" 1' 2'
SCALE

Coyote Crest Wind Park
Figure 13
Typical Inverted T Foundation

NO.	BY	CHK.	APP.	DATE	REVISION DESCRIPTION
0	MBJ	JXB	CAK	28-MAR-08	RELEASE FOR CONSTRUCTION
1	MBJ	JXB	CAK	2-APR-08	UPDATED GEOTECHNICAL REPORT REFERANCE

I HEREBY CERTIFY THAT THIS ENGINEERING DOCUMENT WAS PREPARED BY ME OR UNDER MY DIRECT PERSONAL SUPERVISION AND THAT I AM A DULY REGISTERED PROFESSIONAL ENGINEER UNDER THE LAWS OF THE STATE OF PENNSYLVANIA.
SIGNATURE: Joel E. Bahma
PRINTED NAME: JOEL E. BAHMA
DATE 28 MAR 2008 REG. NO. PE063043

RELEASED TO/FOR	A	B	C	0	1	2	3
CLIENT	31-NOV-07	27-MAR-08					
BID							
CONSTRUCTION				28-MAR-08	2-APR-08		
DATE RELEASED							

BARR
Corporate Headquarters: Minneapolis, Minnesota Ph: 1-800-632-2277

Project Office:
BARR ENGINEERING CO.
4700 WEST 77TH STREET
MINNEAPOLIS, MN.
55435-4803
Ph: 1-800-632-2277
Fax: (952) 832-2601
www.barr.com

Scale	AS SHOWN
Date	21-NOV-07
Drawn	MBJ
Checked	JXB
Designed	MBJ
Approved	CAK

WHITE CONSTRUCTION, INC.
CLINTON, INDIANA

M:\cad\3611002\Highlands_S-01_Rev B.dwg Plot at 1 03/11/2008 22:23:59
MBJ