APPENDIX E

RADAR AND VISUAL STUDY OF NOCTURNAL BIRD AND BAT MIGARATION FALL 2008

FINAL REPORT

A RADAR AND VISUAL STUDY OF NOCTURNAL BIRD AND BAT MIGRATION AT THE PROPOSED COYOTE CREST WIND POWER PROJECT, WASHINGTON, FALL 2008

TODD J. MABEE
JONATHAN H. PLISSNER
COREY M. GRINNELL

PREPARED FOR

TETRA TECH EC, INC.
PORTLAND, OREGON

AND

EVERPOWER RENEWABLES
PORTLAND, OREGON

PREPARED BY

ABR, INC.—ENVIRONMENTAL RESEARCH & SERVICES
FOREST GROVE, OREGON

A RADAR AND VISUAL STUDY OF NOCTURNAL BIRD AND BAT MIGRATION AT THE PROPOSED COYOTE CREST WIND POWER PROJECT, WASHINGTON, FALL 2008

FINAL REPORT

Prepared for

Tetra Tech EC, Inc.

1750 SW Harbor Way, Suite. 400

Portland, Oregon 97201

and

Everpower Renewables

135 SE Main Street, Suite 201

Portland, Oregon 97214

Prepared by

Todd J. Mabee

Jonathan H. Plissner

Corey M. Grinnell

ABR, Inc.—Environmental Research & Services

P.O. Box 249, Forest Grove, Oregon 97116

March 2010

Printed on recycled paper.

EXECUTIVE SUMMARY

- The primary goal of these radar and visual studies was to collect information on the migration characteristics of nocturnally migrating birds (especially passerines) and bats during fall migration. Specifically, the objectives were to: (1) collect baseline information on flight directions, passage rates, and flight altitudes of nocturnal targets (i.e., migratory birds and bats); (2) visually estimate the relative proportions of birds and bats ≤150 m agl; (3) estimate the numbers of birds and bats that flew at heights within the proposed turbine dimensions during fall 2008; and (4) determine the amount of among-night and within-night variation in passage rates and flight altitudes of nocturnal targets (bats/birds).
- We present results of radar and visual studies of bird and bat migration conducted during a 61-night period in fall (15 August–14 October 2008) at the proposed Coyote Crest Wind Power Project, located in Lewis and Pacific Counties, Washington. We conducted radar and visual observations for 6 h/night.
- Most targets (83%) were traveling in a seasonally appropriate direction for fall migration (i.e., southerly) between SE (135°) and SW (225°). The mean flight direction of radar targets was 177° (median = 175°; CSD = 66°; mean vector length = 0.52).
- The mean nocturnal passage rate was 196 ± 18 targets/km/h and nightly mean passage rates ranged from 8–492 targets/km/h.
- The mean nocturnal flight altitude was 454 ± 3 m agl (range = 210–634 m agl). The percentage of targets recorded below 125 m agl was 10%.
- The mean altitude-specific passage rate (i.e., passage rates below 125 m agl) was 27 ± 4 targets/km/h and ranged from 0–135 targets/km/h across all study nights.
- Passage rates decreased during fog conditions and increased during tailwinds or when weather was benign.
- Flight altitudes increased as the study progressed throughout the fall and showed weaker relationships such as increasing with tailwinds.
- We estimated a turbine passage rate of 1.7–15.9 nocturnal bird/bat migrants per night passing within the area occupied by each proposed turbine (tower and rotor-swept area). The range in estimated rates reflects minimal and maximal exposure of the turbine orientation relative to prevailing flight directions.
- Using night-vision goggles and spotlights to calculate the proportion of birds and bats below ~150 m agl, we observed that identifiable targets (93% of all observed animals) consisted of 89% birds and 11% bats.

TABLE OF CONTENTS

EXECUTIVE SUMMARY iii
LIST OF FIGURES vi
LIST OF TABLES vi
LIST OF APPENDICES vii
ACKNOWLEDGMENTS vii
INTRODUCTION 1
OBJECTIVES 3
STUDY AREA 3
METHODS 3
STUDY DESIGN 3
RADAR EQUIPMENT 4
DATA COLLECTION 4
TARGET IDENTIFICATION ON RADAR 4
SAMPLING DESIGN 6
VISUAL OBSERVATIONS OF LOW-ALTITUDE BIRDS AND BATS 7
DATA ANALYSES 7
RADAR DATA 7
EFFECTS OF WEATHER ON MIGRATION PASSAGE RATES AND FLIGHT ALTITUDES 8
TURBINE PASSAGE RATE INDEX 10
RESULTS 10
FLIGHT DIRECTION 10
PASSAGE RATES 10
FLIGHT ALTITUDES 10
LOW ALTITUDE PASSAGE RATES 10
EFFECTS OF WEATHER ON MIGRATION 11
PASSAGE RATES 11
FLIGHT ALTITUDES 11
TARGETS WITHIN THE PROPOSED TURBINE AREA 16
VISUAL OBSERVATIONS 17
DISCUSSION 17
TIMING OF MIGRATION 19
PASSAGE RATES 20
FLIGHT ALTITUDES 21
MODELING MIGRATION PASSAGE RATES AND FLIGHT ALTITUDES 21
PASSAGE RATES 21
FLIGHT ALTITUDES 22
IDENTIFICATION OF MIGRATORY BIRDS AND BATS 22
TARGETS WITHIN THE PROPOSED TURBINE AREA 23
SUMMARY 23
LITERATURE CITED 24

LIST OF FIGURES

Figure 1. Map of the proposed Coyote Crest Wind Power Project and radar sampling station in Lewis and Pacific Counties, Washington, fall 2008 2

Figure 2. Approximate airspace sampled by Furuno FR–1510 marine radar when operating in the surveillance mode as determined by field trials with Rock Pigeons 5

Figure 3. Approximate airspace sampled by Furuno FR–1510 marine radar when operating in the vertical mode as determined by field trials with Rock Pigeons 5

Figure 4. Synoptic weather codes used to depict the position of the study site relative to a high pressure system 9

Figure 5. Flight directions of radar targets at the proposed Coyote Crest Wind Power Project, Washington, fall 2008 11

Figure 6. Mean ± 1 SE nightly passage rates at the proposed Coyote Crest Wind Power Project, Washington, fall 2008 12

Figure 7. Percent of nightly passage rate relative to time past sunset for nights with full sampling at the proposed Coyote Crest Wind Power Project, Washington, fall 2008 12

Figure 8. Mean ± 1 SE nightly flight altitude of radar targets at the proposed Coyote Crest Wind Power Project, Washington, fall 2008 13

Figure 9. Mean flight altitude relative to time past sunset for nights with full sampling at the proposed Coyote Crest Wind Power Project, Washington, fall 2008 13

Figure 10. Mean ± 1 SE nightly below 125 m agl passage rates at the proposed Coyote Crest Wind Power Project, Washington, fall 2008 14

Figure 11. Mean nightly movement rate of birds and bats/h observed during visual sampling at the proposed Coyote Crest Wind Power Project, Washington, fall 2008 18

Figure 12. Mean number of birds/h or bats/h observed during nights with 6h of visual sampling relative to time past sunset at the proposed Coyote Crest Wind Power Project, Washington, fall 2008 18

Figure 13. Flight directions of birds and bats observed during visual sampling at the proposed Coyote Crest Wind Power Project, Washington, fall 2008 19

LIST OF TABLES

Table 1. Nocturnal flight altitudes of radar targets detected at the 1.5-km range at the proposed Coyote Crest Wind Power Project, Washington, spring 2008, by 100 m agl flight altitude category 14

Table 2. Linear mixed model estimates from competitive models explaining the influence of environmental factors on passage rates and flight altitudes of radar targets at the proposed Coyote Crest Wind Power Project, Washington, fall 2008 15

Table 3. Model-averaged parameter estimates from competitive models explaining the influence of environmental factors on passage rates and flight altitudes of radar targets at the proposed Coyote Crest Wind Power Project, Washington, fall 2008 16

Table 4. Numbers of birds and bats observed during nocturnal visual sampling at the proposed Coyote Crest Wind Power Project, Washington, spring 2008 17

LIST OF APPENDICES

Appendix 1. Full model set from analyses employing Akaike's Information Criterion to investigate the influence of environmental factors on passage rates of radar targets at the proposed Coyote Crest Wind Power Project, Washington, fall 2008 32

Appendix 2. Mean passage rates, altitude specific passage rates, and flight altitudes of nocturnal radar targets observed at the 1.5-km range during half-month periods of fall migration and over the full sampling season at the proposed Coyote Crest Wind Power Project, Washington, fall 2008 33

Appendix 3. Nocturnal flight altitudes of radar targets detected at the 1.5-km range at the proposed Coyote Crest Wind Power Project, Washington, fall 2008, by 25 m agl flight altitude category 34

Appendix 4. Linear mixed models with weights >0 explaining the influence of environmental factors on passage rates and flight altitudes of radar targets at the proposed Coyote Crest Wind Power Project, Washington, fall 2008 35

Appendix 5. Calculation of turbine passage rate indices during nocturnal periods of fall 2008, at the proposed Coyote Crest Wind Power Project, Washington, spring 2008 36

Appendix 6. Results of fall migration studies conducted at proposed U.S. wind power development areas, using X-band mobile radar systems 37

Appendix 7. Results of nocturnal surveys conducted by ABR, Inc., at proposed wind power development areas during fall in the U.S 39

Appendix 8. Seasonal mean rates of birds and bats flying below ~ 150 m agl observed with night-vision goggles and infrared spotlights during nocturnal hours of spring and fall migration 40

Appendix 9. Fall turbine passage rate indices at proposed U.S. wind power development areas, based on studies using X-band mobile radar systems 41

Appendix 10. Citations for wind power projects listed in Appendices 6, 7, 8, and 9 42

ACKNOWLEDGMENTS

We thank Everpower Renewables for funding this study and Tetra Tech EC, Inc. for the opportunity to participate in this study. In particular we thank Dave McClain (Everpower Renewables), and Lynn Sharp and Alicia Oller (Tetra Tech EC) for assistance with project coordination and logistics. We appreciate the efforts of ABR employees Mike Davis, Cris Hein, Jena Lemke, Melinda Malek, Nick Haxton, and Nathan Schwab, for their help with radar and visual data collection. Also at ABR, Susan Cooper, and Delee Spiesschaert helped with office logistics and project coordination, Rich Blaha prepared report maps, and Pam Odom helped with report preparation.

INTRODUCTION

Wind energy is one of the fastest growing sources of energy production in the US (GAO 2005, EIA 2007). Studies examining the impacts of windfarms on birds in the US and Europe suggest that fatalities and behavioral modifications (e.g., avoidance of windfarms) occur in some, but not all, locations (Winkelman 1995, Anderson et al. 1999, Erickson et al. 2001). In the US both resident and migratory birds sometimes collide with wind turbines (Erickson 2004, NWCC 2004) with the overall fatality rate being similar (~2.3–3.5 avian fatalities/MW/yr) on a regional scale in the US (NRC 2007).

The makeup of these fatalities varies for some species groups, although passerines ("songbirds") comprise ~ 70–85% of the known bird collisions at wind power developments throughout the US (Erickson et al. 2001, Strickland and Johnson 2006). Neotropical migratory species of passerines such as thrushes (Turdidae), vireos (Vireonidae), and warblers (Parulidae) have a long history of colliding with above-ground structures (Kerlinger 2000, Longcore et al. 2005) and seem to be the most vulnerable to collisions during their nocturnal migrations (Manville 2005). This pattern also holds true at wind-energy developments, with ~30–50% of the fatalities at windfarms involving nocturnal passerine migrants (Erickson et al. 2001, Strickland and Johnson 2006). This makes sense both because of poorer visibility at night and because passerines tend to migrate at lower altitudes than do other groups of birds (e.g., shorebirds, waterfowl; Kerlinger 1995, Alerstam 1990).

The paucity of general information on nocturnal bird migration in most areas has generated interest in conducting preconstruction studies of nocturnal migration at the growing number of proposed wind power developments throughout the country (CEC and CDFG 2007, Kunz et al. 2007a). Consideration of potential wind power impacts on nocturnal bird migration is particularly important because more birds migrate at night than during the daytime (Gauthreaux 1975, Kerlinger 1995) and frequently a large proportion (ranging from 0–80%) of the fatalities at wind-energy developments are from nocturnal passerine migrants (Erickson et al. 2001).

Bat fatalities at wind-energy facilities also have been documented since the early 1970s (Hall and Richards 1972). Previous studies have documented high fatality rates along forested ridges in the eastern US (e.g., Mountaineer, WV, Kerns et al. 2005; Buffalo Mountain, TN, Fiedler 2004, Fiedler et al. 2007). However, recent data suggest high fatality events occur across a variety of landscapes throughout North America, including agricultural fields, grassland prairies, and deciduous or coniferous forests (Barclay et al. 2007, Kunz et al. 2007b, Arnett et al. 2008). Most bat fatalities (~86%) documented at wind farms involve migratory tree-roosting species (i.e., hoary [*Lasiurus cinereus*], eastern red [*Lasiurus borealis*] and silver-haired [*Lasionycteris noctivagans*] bats) during seasonal periods of migration in late summer and fall. Although several hypotheses exist (e.g., roost, landscape, acoustic or visual attraction) explaining possible bat/turbine interactions, none have been confirmed (Arnett 2005, Barclay et al. 2007, Cryan and Brown 2007, Kunz et al. 2007b). However, recent evidence suggests that bat/turbine interactions likely are non-random events. Using thermal infrared imaging, Horn et al. (2008) documented bats investigating turbine structures and foraging in and around the rotor swept area. Resolution of these different hypotheses requires additional data on population estimates, migratory pathways, and flight behaviors around wind turbines of North American bats.

Everpower Renewables proposes to develop the Coyote Crest Wind Power Project (CCWPP), a ~110 MW wind power development in Lewis and Pacific Counties in southwestern Washington (Fig. 1). The development would consist of ~55 wind turbines, each with a generating capacity of up to ~2.0 MW. Characteristics of the wind turbines currently under consideration by Everpower include a monopole tower ~80 m in height and three rotor blades each extending up to ~47.5 m equating to a rotor area of ~95 m in diameter. Thus, the total maximal height of each turbine will be ~127.5 m with a blade in the vertical position.

The proposed CCWPP is located in the Pacific Northwest, a region that contains several mountain ranges, major river systems, wetlands, shrub-steppe habitats, and coastal habitats that all influence the migration characteristics of birds.

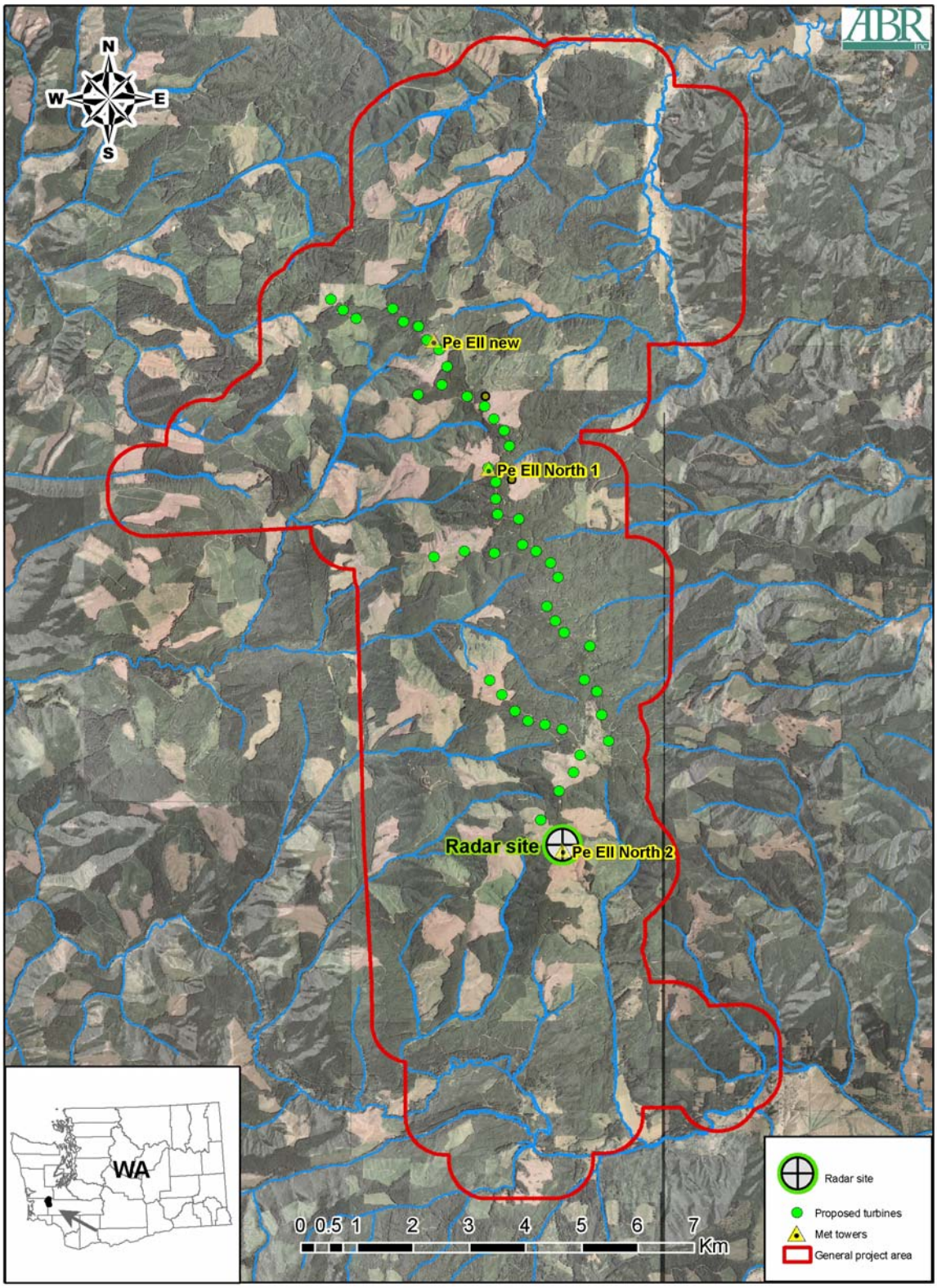

Figure 1. Map of the proposed Coyote Crest Wind Power Project and radar sampling station in Lewis and Pacific Counties, Washington, fall 2008.

Although Oregon and Washington contain several known migration corridors for diurnally migratory waterfowl (Bellrose 1976) and raptors (Zalles and Bildstein 2000) there is little information on the migratory pathways of nocturnal migrants such as passerines and bats (but see Mabee and Cooper 2004). Within ~35–45 km to the northwest and west of the proposed development are large coastal bays (Grays Harbor and Willapa Bay) that provide important stopover habitat for large numbers of migratory waterfowl and shorebirds (Page et al. 1999). Some shorebird species are believed to cross into the Great Basin (and not continue migrating south along the Pacific Coast) raising the possibility that shorebirds from these bays may pass over CCWP en route to the Great Basin during fall migration. We conducted the current study to provide baseline information on nocturnal migrants at the proposed CCWPP during fall 2008.

OBJECTIVES

The primary goal of this study was to collect information on the migration characteristics of nocturnally migrating birds (especially passerines) and bats during the peak period of fall migration at the proposed Coyote Crest Wind Power Project (CCWPP). Specifically, the objectives were to: (1) collect baseline information on flight directions, passage rates, and flight altitudes of nocturnal targets (i.e., migratory birds and bats) in the vicinity of the proposed wind project; (2) visually estimate the relative proportions and passage rates of birds and bats in the proposed turbine zone; (3) estimate the numbers of birds and bats that fly at heights within the proposed turbine zone; and (4) determine the amount of among-night and within-night variation in passage rates and flight altitudes of nocturnal targets (birds/bats). We also evaluated the influence of weather on migration passage rates and flight altitudes.

STUDY AREA

The proposed Coyote Crest Wind Power Project (CCWPP) consists of ~ 31,700 acres of mountainous terrain located in the Oregon Coast Range physiographic region (USGS 2003) of Lewis and Pacific Counties in southwestern Washington. The proposed development is located ~30 km east of the town of Raymond, Washington and ~30 km west of Chehalis, Washington. (Fig. 1). The property is owned by Weyerhaeuser and managed as an industrial forest, hence the proposed turbine locations would occur along a ridgeline consisting of a patchwork of clear cuts and managed young-age (second or third growth) coniferous forest. The proposed turbine strings are located along a convoluted ridge system that generally runs northwest to southeast, with elevations ranging from ~500–725 m asl. The topography of the project area is not linear and does not stand out in comparison to other “ridges” in the area.

Our study included one radar sampling station located in an open area near the southernmost met tower (i.e., met tower 2) that provided excellent radar coverage for fall migration (Fig. 1). The radar sampling station (UTM Zone 10, E 474754 N5169347, NAD83) was located ~658 m asl in the southern section of the development.

METHODS

STUDY DESIGN

We conducted nightly radar and visual observations at a single survey station on 61 nights in fall 2008 (15 August to 14 October) during the general peak of passerine migration in this region. This timing was chosen to coincide with the period when many songbirds (and some shorebirds, waterfowl and bats) would be expected to be migrating through the area. Each night sampling started ~45 min after sunset and continued for a total of ~6 h/night to provide coverage during the peak hours of nocturnal passerine migration within a night (Lowery 1951, Gauthreaux 1971, Alerstam 1990, Kerlinger 1995, Mabee et al. 2006a).

We obtained useable data from radar observations during 58–59 nights, depending on the analyses. On one night, we were unable to conduct radar observations because of inclement weather (rain) and on another night weather conditions limited sampling to flight altitude data only. We obtained useable data from visual observations during 45 nights; and on the remaining nights, we were unable to conduct visual observations because of reduced visibility due to fog or rain. Additionally, weather conditions also

reduced the number of visual sampling sessions or session sampling time within many of the other nights when at least some sampling was possible.

RADAR EQUIPMENT

Our mobile radar laboratory consisted of a marine radar that was mounted on the roof of a van and that functioned as both a surveillance and vertical radar. When the antenna was in the horizontal position (i.e., in surveillance mode), the radar scanned the area surrounding the lab (Fig. 2), and we manually recorded information on flight direction, flight behavior, passage rates, and groundspeeds of targets. When the antenna was placed in the vertical position (i.e., in vertical mode), the radar scanned the area in an arc across the top of the lab (Fig. 3), and we manually measured flight altitudes of targets with an index line on the monitor. All data were recorded manually into a laptop computer. A description of a similar radar laboratory can be found in Gauthreaux (1985a, 1985b) and Cooper et al. (1991), and a similar vertical radar configuration was described by Harmata et al. (1999) and Mabee et al. (2006a).

The radar (Furuno Model FR-1510 MKIII; Furuno Electric Company, Nishinomiya, Japan) is a standard marine radar transmitting at 9.410 GHz (i.e., X-band) through a 2-m-long slotted waveguide (antenna) with a peak power output of 12 kW. The antenna had a beam width of 1.23° (horizontal) × 25° (vertical) and a sidelobe of ±10–20°. Range accuracy is 1% of the maximal range of the scale in use or 30 m (whichever is greater) and bearing accuracy is ±1°.

This radar can be operated at a variety of ranges (0.5–133 km) and pulse lengths (0.07–1.0 µsec). We used a pulse length of 0.07 µsec while operating at the 1.5-km range. At shorter pulse lengths, echo resolution is improved (giving more accurate information on target identification, location, and distance), whereas, at longer pulse lengths, echo detection is improved (increasing the probability of detecting a target). An echo is a picture of a target on the radar monitor; a target is one or more birds (or bats) that are flying so closely together that the radar displays them as one echo on the display monitor. This radar has a digital color display with several scientifically useful features, including True North correction for the display screen (to determine flight directions), color-coded echoes (to differentiate the strength of return signals), and on-screen plotting of a sequence of echoes (to depict flight paths). Because targets plot every sweep of the antenna (i.e., every 2.5 sec) and groundspeed is directly proportional to the distance between consecutive echoes, we were able to measure ground speeds of plotted targets to the nearest ~10 km/h with a hand-held scale.

Energy reflected from the ground, surrounding vegetation, and other solid objects that surround the radar unit causes a ground-clutter echo to appear on the display screen. Because ground-clutter echoes can obscure targets, we minimized their occurrence by elevating the forward edge of the antenna by ~15° and by parking the mobile radar laboratory in locations that were surrounded by low trees or low hills, whenever possible. These objects act as a radar fence that shields the radar from low-lying objects farther away from the lab and that produces only a small amount of ground clutter in the center of the display screen. For further discussion of radar fences, see Eastwood (1967), Williams et al. (1972), Skolnik (1980), and Cooper et al. (1991). The sampling station at the proposed Coyote Crest Wind Power Project was the best suitable radar site because it allowed for maximal radar coverage with minimal ground clutter making it the best choice for a fall migration monitoring site in the proposed project area.

Maximal distances of detection of targets by the surveillance radar depend on radar settings (e.g., gain and pulse length), target body size, flock size, flight profile, proximity of targets in flocks, atmospheric conditions, and, to some extent, the amount and location of ground clutter. Cooper et al. (1991) found that flocks of waterfowl routinely were detected at distances of 5–6 km, individual hawks usually were detected to 2–3 km, and single, small passerines were routinely detected out to 1–1.5 km (Cooper et al. 1991).

DATA COLLECTION

TARGET IDENTIFICATION ON RADAR

The species composition and size of a flock of birds or bats observed on the radar usually was

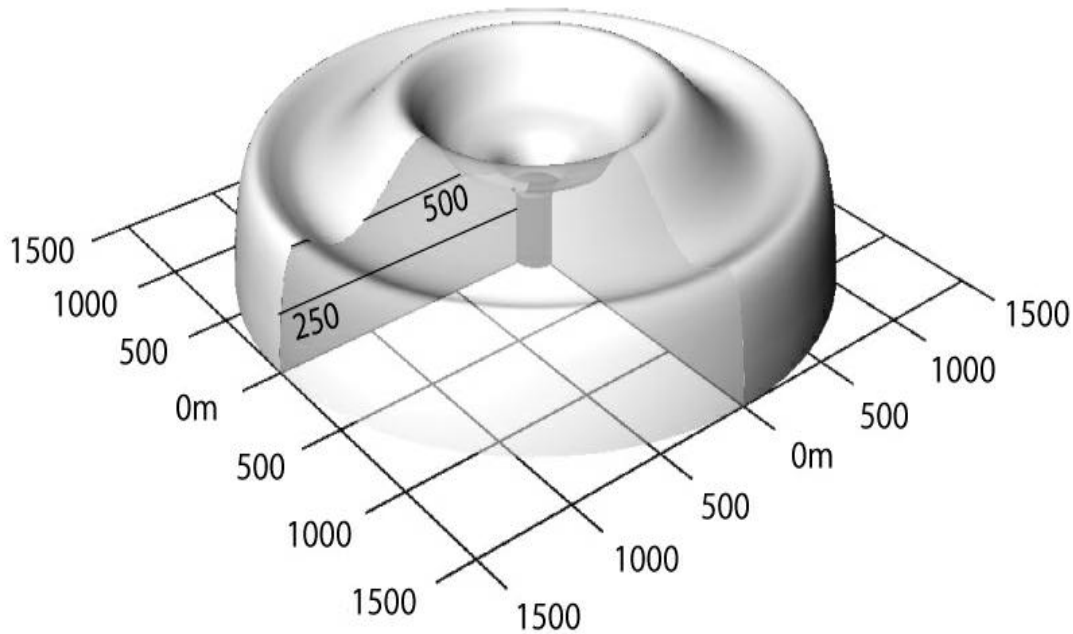

Figure 2. Approximate airspace sampled by Furuno FR–1510 marine radar when operating in the surveillance mode (antenna in the horizontal orientation) as determined by field trials with Rock Pigeons. Note that the distribution of the radar beam within 250 m of the origin (i.e., the darkened area) was not determined.

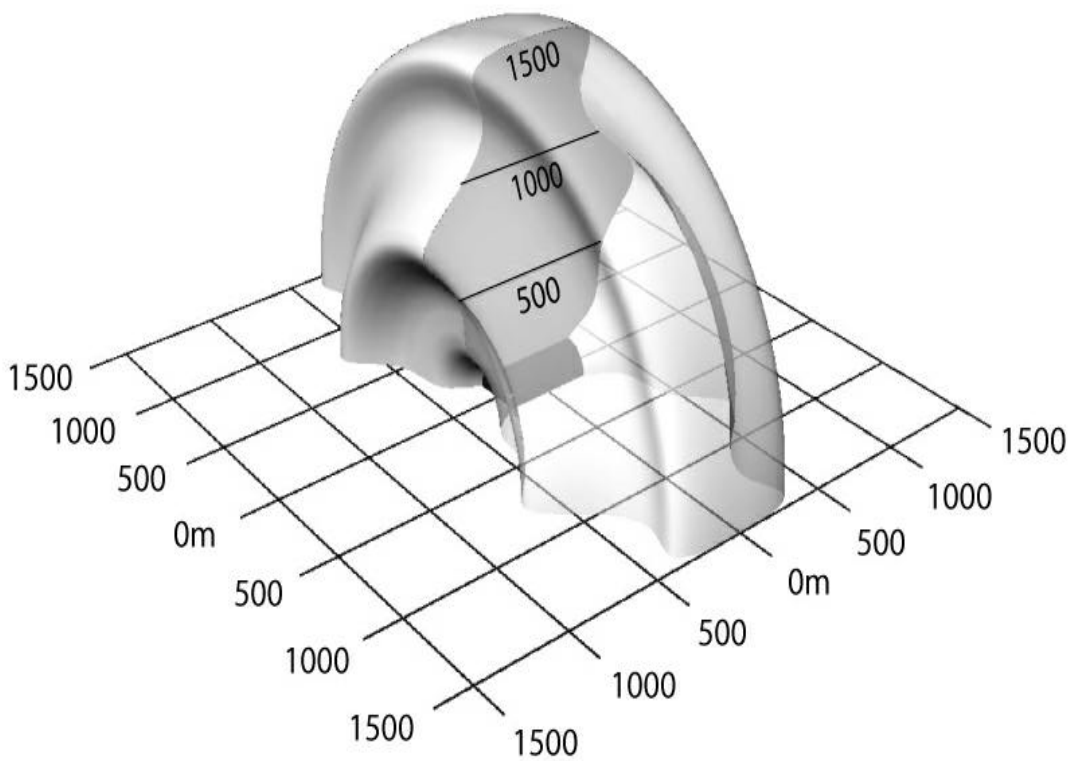

Figure 3. Approximate airspace sampled by Furuno FR–1510 marine radar when operating in the vertical mode (antenna in the vertical orientation) as determined by field trials with Rock Pigeons. Note that the distribution of the radar beam within 250 m of the origin (i.e., the darkened area) was not determined.

unknown. Therefore, the term "target," rather than "flock" or "individual," is used to describe animals detected by the radar. Based on the study period and target size, it is likely that the majority of targets that we observed were individual passerines, which generally do not migrate in tight flocks (Lowery 1951, Kerlinger 1995), but rather are considered to migrate in widely dispersed flocks (Larkin and Szafoni 2008).

Differentiating among various targets (e.g., birds, bats, insects) is central to any radar study, especially with X-band radars that can detect small flying animals. Because bat flight speeds overlap with flight speeds of passerines (i.e., are >6 m/s; Tuttle 1988, Larkin 1991, Bruderer and Boldt 2001, Kunz and Fenton 2003; Cooper and Day ABR Inc., unpubl. data), it was not possible to separate bird targets from bat targets based solely on flight speeds. We were able to exclude foraging bats based on their erratic flight patterns; however, migratory bats or any bats not exhibiting erratic flight patterns were included in our data.

Of primary importance in target identification is the elimination of insect targets. We reduced insect contamination by (1) omitting small targets [e.g., the size of radar gain speckles (~1mm)] that only appeared within ~500 m of the radar and targets with poor reflectivity (e.g., targets that plotted erratically or inconsistently in locations having good radar coverage); and (2) editing data prior to analyses by omitting surveillance and vertical radar targets with corrected airspeeds <6 m/s (following Diehl et al. 2003). The 6 m/s airspeed threshold was based on radar studies that have determined that most insects have an airspeed of <6 m/s, whereas that of birds and bats usually is ≥6 m/s (Tuttle 1988, Larkin 1991, Bruderer and Boldt 2001, Kunz and Fenton 2003; Cooper and Day ABR Inc., unpubl. data).

SAMPLING DESIGN

Each night of the study period was divided into six, one-hr radar sampling sessions and each session consisted of: (1) one 10-min session to collect weather data and adjust the radar to surveillance mode; (2) one 10-min session with the radar in surveillance mode (1.5-km range) for collection of information on migration passage rates; (3) one 15-min session with the radar in surveillance mode (1.5-km range) for collection of information on groundspeed, flight direction, tangential range (minimal perpendicular distance to the radar laboratory), transect crossed (the four cardinal directions—north, south, east, and west), species (if known), and the number of individuals (if known); (4) one 10-min session to collect weather data and adjust the radar to vertical mode; and (5) one 15-min session with the radar in vertical mode (1.5-km range) to collect information on flight altitudes, speed, and direction.

For each vertical radar session, the antenna was oriented parallel to the main axis of migration (determined by the modal flight direction seen during the previous surveillance radar session) to maximize the true flight speed of targets. True flight speeds of targets can be determined only for those targets flying parallel to the antenna's orientation because slower speeds are obtained when targets fly at an angle to this plane of orientation. We also examined the flight behavior of vertical radar targets during by recording whether targets were ascending from the ground clutter, ascending at a steep angle above the ground clutter (extrapolated flight path would have intersected the ground clutter on the monitor), flying at a level altitude, descending at a steep angle (extrapolated flight path would have intersected the ground clutter on the monitor), and descending into the ground clutter.

Weather data collected twice each hour consisted of the following: wind speed (in KPH, collected with a Kestrel® weather instrument [Nielsen-Kellerman Company, Boothwyn, PA]); wind direction (measured with a compass to the nearest 5°); cloud cover (estimated to the nearest 5%); ceiling height (in m agl; 1–50, 51–100, 101–150, 151–500, 501–1,000, 1,001–2,500, 2,501–5,000, >5,000); minimal visibility in a cardinal direction (in m; 0–50, 51–100, 101–500, 501–1,000, 1,001–2,500, 2,501–5,000, >5,000); precipitation level (no precipitation, fog, drizzle, light rain, heavy rain, snow flurries, light snowfall, heavy snowfall, sleet, hail); barometric pressure (in inches of Hg measured with a Kestrel® weather instrument); and air temperature (measured to the nearest 1°C with a Kestrel® weather instrument). We also obtained weather data (wind speed and wind direction based on 10-min averages) from a 60-m high meteorological tower located next to the

radar sampling site. We could not collect radar data during rain because the electronic filtering required to remove the echoes of the precipitation from the display screen also removed those of the targets of interest.

VISUAL OBSERVATIONS OF LOW-ALTITUDE BIRDS AND BATS

We conducted visual observations with Generation-3 night-vision goggles with a 1× eyepiece (Model ATN-PVS7; American Technologies Network Corporation, San Francisco, CA) during every night of radar sampling to assess relative numbers and proportions of birds and bats flying at low altitudes (≤150 m agl—the approximate maximal distance at which passerines and bats could be discerned). We conducted two visual sampling sessions of 20–25 min each hour, concurrent with radar surveys. We used two 3 million-Cp spotlights with infrared lens filters to illuminate targets flying overhead while eliminating the attractiveness of the light to insects, birds, and bats. One "fixed" spotlight was mounted on a tripod with the beam oriented vertically, while a second, handheld light was used to track and identify potential targets flying through the spotlight beams. We estimated vertical visibility limits for each sample period and excluded from analyses all sessions with estimated visibility <100 m. For each bird or bat detected visually, observers recorded the taxon (to species when possible), flight direction, flight altitude, and flight behavior (straight-line, erratic, circling). Whenever possible, bats were classified as "small bats" or "large bats," in an attempt to discriminate the larger hoary, big brown (*Eptesicus fuscus*), and silver-haired bats from smaller species (e.g., *Myotis* spp.).

DATA ANALYSES

RADAR DATA

We entered all radar data into MS Access databases. Data files were checked visually for errors after each night and then were checked again electronically for irregularities at the end of the field season, prior to data analyses. All analyses were conducted with SPSS statistical software (SPSS 2009). For quality assurance, we cross-checked results of the SPSS analyses with hand-tabulations of small data subsets whenever possible. The level of significance (α) for all statistical tests was set at 0.05.

Radar data were not corrected for differences in detectability with distance from the radar unit. Correcting for differences in target detectability is confounded by several factors, including but not limited to the following: (1) variation in target size (i.e., species) across the study period; (2) an assumption that there is an equal distribution of targets throughout the sampling area (which would be violated if migrants responded to landform or microsite features on the landscape); (3) variation in the shape and size of the effective radar-sampling beam (see our preliminary assessment of the shape of our radar beam under one set of conditions in Figures 2 and 3). Thus, our passage rate estimates (and other estimates derived from passage rates) should be considered an index of the actual number of birds and bats passing through the area, useful for comparisons with our previous studies and other radar studies that use similar equipment and methods.

Airspeeds (i.e., groundspeed corrected for wind speed and relative direction) of surveillance-radar targets were computed with the formula used by Mabee et al. (2006a). Targets that had corrected airspeeds <6 m/s (18.8% from surveillance data) were deleted from all analyses.

We calculated mean and median flight directions of radar targets to provide insight on the orientation of bird movements. Equally important, we present a metric to describe the dispersion of flight directions. This metric, the mean vector length (r), varies from a value of 0 (maximal dispersion) to 1 (maximal concentration). Mean flight directions coupled with high r values indicate strong patterns in flight orientation whereas mean flight directions coupled with low r values indicate weak to no directionality in flight movements. We analyzed flight-direction data following procedures for circular statistics (Zar 1999) with Oriana software version 2.0 (Kovach 2003).

Migration passage rates are reported as the mean ± 1 standard error (SE) number of targets passing along 1 km of migratory front/h (targets/km/h ± 1 SE). Passage rates of targets flying <125 m in altitude were derived for each

hourly period by multiplying passage rates recorded from surveillance radar by the percentage of targets on vertical radar having flight altitudes <125 m, correcting for the hypothetical maximal height of the surveillance radar beam (861 m). All flight-altitude data are presented in m agl (above ground level) relative to a horizontal plane passing through the radar-sampling site. Actual mean altitudes may be higher than those reported because an unknown number of birds fly above the 1.5-km range limit of our radar (Mabee and Cooper 2004).

For calculations of the daily patterns in migration passage rates and flight altitudes, we assumed that a day began at 0700 h on one day and ended at 0659 h the next day, so that a sampling night was not split between two dates. We used repeated-measures ANOVAs to compare passage rates and flight altitudes among hours of the night for nights with data collected during all six hourly sessions. To correct for violations of the assumption of sphericity in these analyses, we adjusted degrees of freedom using the Greenhouse-Geisser epsilon estimate (SPSS 2009). We specified deviations from the overall mean to examine contrasts between hours. Factors that decreased our sample size of the various summaries and analyses included insect contamination and precipitation. Sample sizes therefore sometimes varied among the different summaries and analyses.

EFFECTS OF WEATHER ON MIGRATION PASSAGE RATES AND FLIGHT ALTITUDES

We investigated the importance of weather (i.e., wind direction, wind speed, ceiling height [including fog], synoptic weather, and nights since favorable migration [passage rate models only]), lunar illumination*cloud cover, and date on both the passage rates and flight altitudes of nocturnal migrants by building a series of models (combinations of the various weather variables and date), and then using a model-selection technique (AIC) to quantify the statistical strength of those models. The AIC method allows one to (1) rank and identify the "best" model(s) (i.e., the most statistically supported models) from the full set of models, and (2) assess the statistical strength and relative importance of individual variables composing the "best" models.

We modeled the hourly influence of weather and date separately on the dependent variables passage rates and flight altitudes. We obtained our weather data (i.e., wind speed and direction) from a 60-m meteorological tower located near the radar sampling site. All wind categories except the calm category had a mean wind speed of ≥2.2 m/s (i.e., ≥5 mph) and were categorized as the following during fall: tail winds WNW to ENE (i.e., 293º–068º), head winds ESE to SSW (i.e., 113º–248º), eastern crosswinds (069º–112º), western crosswinds (249º–292º), and calm (0–2.1 m/s).

Prior to model specification, we examined the data for redundant variables (Spearman's r_s >0.70) and retained eight parameters for inclusion in the passage rate model set and seven parameters in the altitude model set. We examined scatterplots and residual plots to ensure that variables met assumptions of analyses (i.e., linearity, normality, collinearity) and did not contain presumed outliers (>3 SE). We used a square root transformation on the dependent variables "passage rate" and "flight altitude" to make the data normal. We specified 31 models for passage rates and 22 models for flight altitudes: a global model containing all variables and subset models representing potential influences of three small-scale weather variables (wind direction, the interaction of wind direction and wind speed, and ceiling height [including fog]), one large-scale weather variable (synoptic —that reflected the position of pressure systems relative to our study site [Fig. 4]), one variable reflecting the number of nights between favorable migration conditions (i.e., the number of nights since last tail wind, used only in passage rate models), one variable describing the percent of the moon illuminated and visible on a given night (the interaction of percent moon illumination and cloud cover), and date on migration passage rates and flight altitudes (Appendix 1).

Synoptic weather codes were based on Gauthreaux (1980) and Williams et al. (2001) but were modified to reflect the movement of pressure systems along the Pacific coast. The synoptic classification reflects the position of our study site

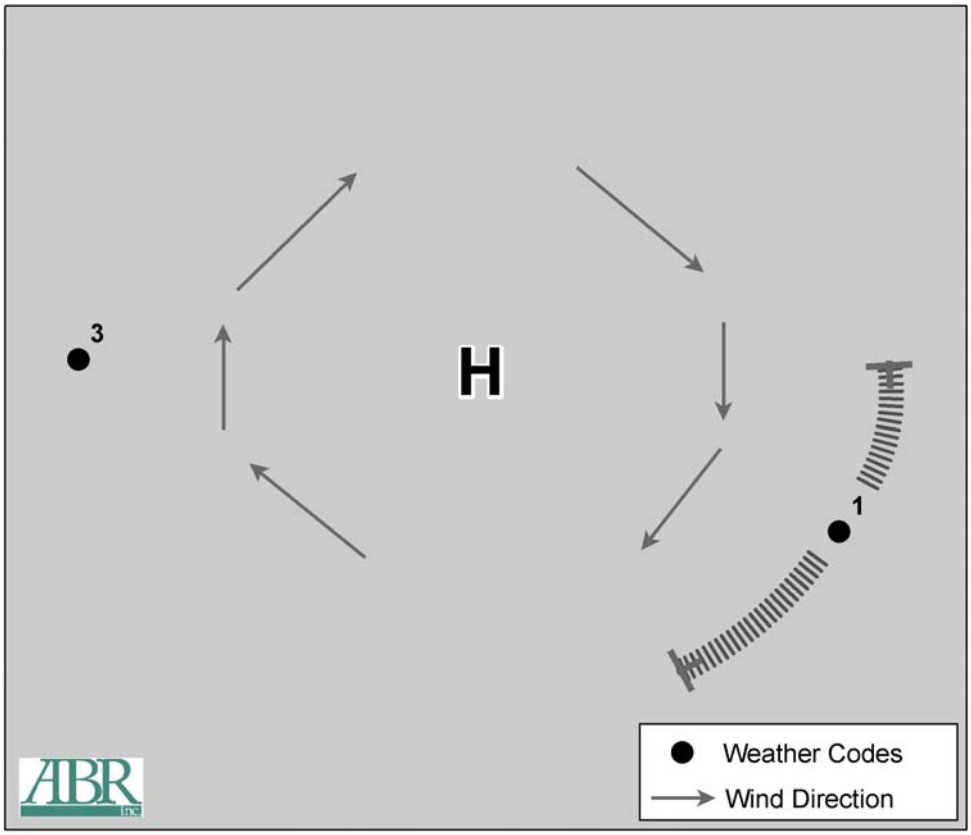

Figure 4. Synoptic weather codes used to depict the position of the study site relative to a high pressure system. Code 1 = study site situated to the east or southeast of a high pressure system, Code 2 = no well-developed pressure system in the vicinity of the study site (not visually depicted), Code 3 = study site situated to the west of a high pressure system.

relative to a high pressure system—1) situated to the east or southeast of a high pressure system, 2) no well-developed pressure system near our site, 3) situated to the west of a high pressure system (Fig. 4). We analyzed all model sets with linear mixed models that treated nights as subjects and hourly sessions within a night as the repeated measure. This treatment of the data allows the full use of hourly sessions while properly modeling the appropriate covariance structure for this variable. Because the hourly sessions within a night were temporally correlated, we used a first-order autoregressive structure with heterogeneous variances for the covariance structure for both the passage rate and altitude models.

Because the number of sampling sessions for both passage rates ($n = 328$) and flight altitudes ($n = 314$) was small relative to the number of parameters (K) in many models (i.e., $n/K < 40$), we used Akaike's Information Criterion corrected for small sample size (AIC_c) for model selection (Burnham and Anderson 2002). We ranked all candidate models according to their AIC_c values and considered the best-approximating model (i.e., most parsimonious) to be that model having the smallest AIC_c value (Burnham and Anderson 2002). We drew primary inference from models within 2 units of the minimal AIC_c value, although models within 4–7 units may have some empirical support (Burnham and Anderson 2002). We calculated Akaike weights (w_i) to determine the weight of evidence in favor of each model (Burnham and Anderson 2002). All analyses were conducted with SPSS software (SPSS 2009).

TURBINE PASSAGE RATE INDEX

To describe migration passage rates within the potential turbine area we developed the turbine passage rate index (the number of nocturnal migrants flying within the turbine area each night). The turbine passage rate index is comprised of several components, including: (1) *passage rate of targets flying <125 m agl* (calculated by multiplying passage rates from surveillance radar by the percentage of targets on vertical radar with flight altitudes <125 m agl, correcting for the maximal height of the surveillance radar beam); (2) *turbine area* that migrants would encounter when approaching turbines from the side (parallel to the plane of rotation) or from the front (perpendicular to the plane of rotation); (3) *study period* (number of nights during the migration sampling period); and (4) *number of hours of migration/night* (estimated as the number of nocturnal hours). These factors are combined to produce the turbine passage rate index.

We consider these estimates to be indices because they are based on several simplifying assumptions that may vary among projects. The assumptions for this specific project include: (1) minimal (i.e., side profile) and maximal (i.e., front profile) areas occupied by the wind turbines relative to the flight directions of migrants, (2) a worst-case scenario of the rotor blades turning constantly (i.e., used the entire rotor swept area, not just the area of the blades themselves), (3) a 60-d migration sampling period, and (4) an average of 10 nocturnal hours/night of migration during fall migration.

RESULTS

FLIGHT DIRECTION

Most nocturnal radar targets (83%) were traveling in a seasonally appropriate direction for fall migration (i.e., southerly), with 54% of flight directions between SE (135°) and SW (225°). The mean flight direction of radar targets was 177° (median = 175°; CSD = 66°; r = 0.52; n = 9,247 targets; Fig. 5).

PASSAGE RATES

The mean nocturnal passage rate for the fall season was 196 ± 18 targets/km/h (n = 59 nights. Mean nightly passage rates were highly variable among nights (range = 8–492 targets/km/h; Fig. 6) and also during different time periods of the migratory season with passage rates higher in September than in August or October (Appendix 2). Passage rates did not vary among nocturnal sampling hours ($F_{2.9,\ 137.2}$ = 0.680, P = 0.559, n = 49 nights; Fig. 7).

FLIGHT ALTITUDES

The mean nocturnal flight altitude observed on vertical radar (1.5-km range) was 454 ± 3 m agl (n = 10,982 targets; median = 387 m agl). Mean nightly flight altitudes were variable among nights (Fig. 8) and ranged from 210–634 m agl. Flight altitudes also were variable among different two-week segments of the migratory season (Appendix 2) with lowest mean altitudes in August and highest mean altitudes in October. Mean flight altitudes did not vary among nocturnal sampling hours ($F_{3.9,\ 170.7}$ = 1.392; P = 0.240; n = 45 nights; Fig. 9).

The overall distribution of targets in 100-m categories of nocturnal flight altitudes varied from 15.9% in the 201–300 m agl interval to 0.1% in the interval from 1,401–1,500 m agl (Table 1). We provide a detailed examination of the cumulative percentage of targets within 250 m agl (by 25-m categories) in Appendix 3. We determined that the mean percentage of targets flying <125 m agl (i.e., within the approximate maximal height of the wind turbines selected for the proposed CCWPP) was 10.0% of all targets.

LOW ALTITUDE PASSAGE RATES

We combined our passage rate and flight altitude data to produce altitude specific passage rates of targets flying <125 m agl. The mean <125 m agl passage rate was 27 ± 4 targets/km/h (n = 56 nights). Overall, mean <125 m agl passage rates were highly variable among nights (range = 0–135 targets/km/h; Fig. 10). Mean <125 m agl passage rates also varied among different two-week segments of the migratory season with highest rates occuring in late September (Appendix 2).

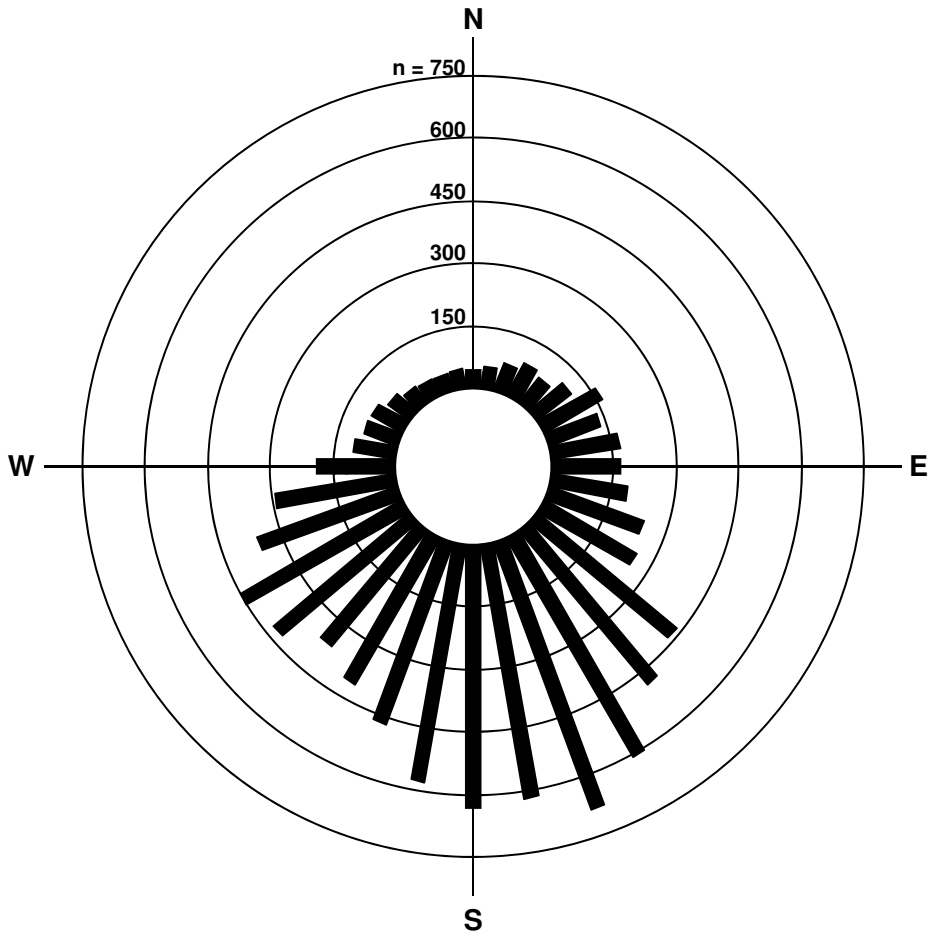

Figure 5. Flight directions of radar targets at the proposed Coyote Crest Wind Power Project, Washington, fall 2008.

EFFECTS OF WEATHER ON MIGRATION

PASSAGE RATES

The best-approximating model explaining migration passage rates of nocturnal migrants during fall migration at the proposed development was the model containing the variables wind direction and ceiling height (Table 2). This model contained significant negative associations with ceiling height and positive associations wind direction (Table 3) indicating that passage rates decreased during fog conditions and increased during tailwinds or when weather was benign. The second-best model contained the variable ceiling height and was well supported ($\Delta AIC_c = 1.48$; Table 2). The weight of evidence in favor of the "best" model ($w_{best}/w_{second\ best}$) was 2.1 times that of the second-best model (Burnham and Anderson 2002). The complete passage rate model can be found in Appendix 4 for the reader interested in examining all models and their associated statistical metrics.

FLIGHT ALTITUDES

The best-approximating model explaining flight altitudes of nocturnal migrants during fall migration at the proposed development was the model containing the variables lunar illumination * cloud cover and date (Table 2). The second-best model contained the variables wind direction and date ($\Delta AIC_c = 1.35$; Table 2). These models contained strong positive associations with date, indicating that altitudes increased over the study

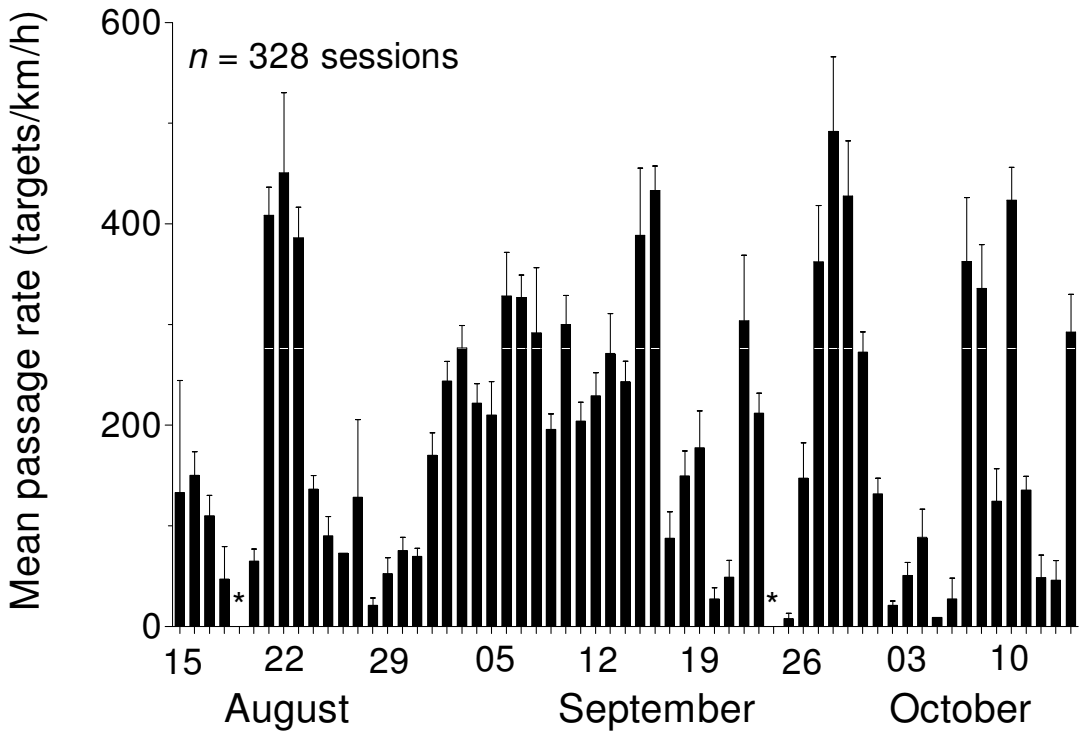

Figure 6. Mean ± 1 SE nightly passage rates (targets/km/h) at the proposed Coyote Crest Wind Power Project, Washington, fall 2008. Asterisks (*) denote nights not sampled because of rain.

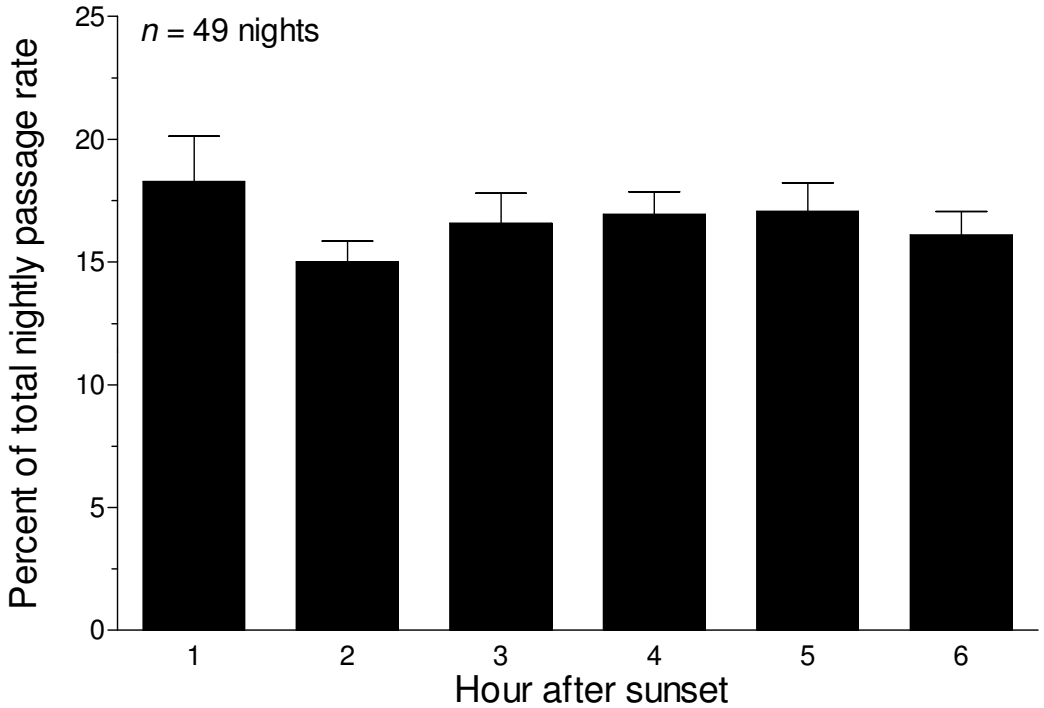

Figure 7. Percent of nightly passage rate (± 1 SE) relative to time past sunset for nights with full sampling at the proposed Coyote Crest Wind Power Project, Washington, fall 2008.

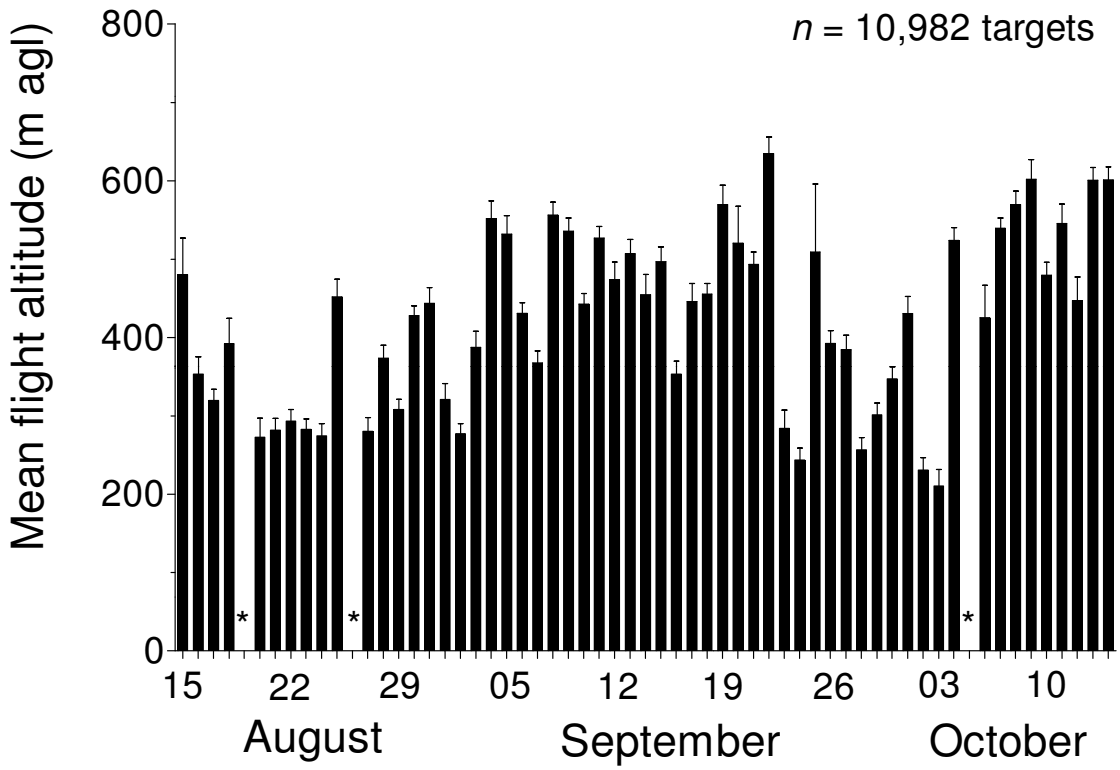

Figure 8. Mean ± 1 SE nightly flight altitude (m agl) of radar targets at the proposed Coyote Crest Wind Power Project, Washington, fall 2008. Asterisks (*) denote nights not sampled because of rain.

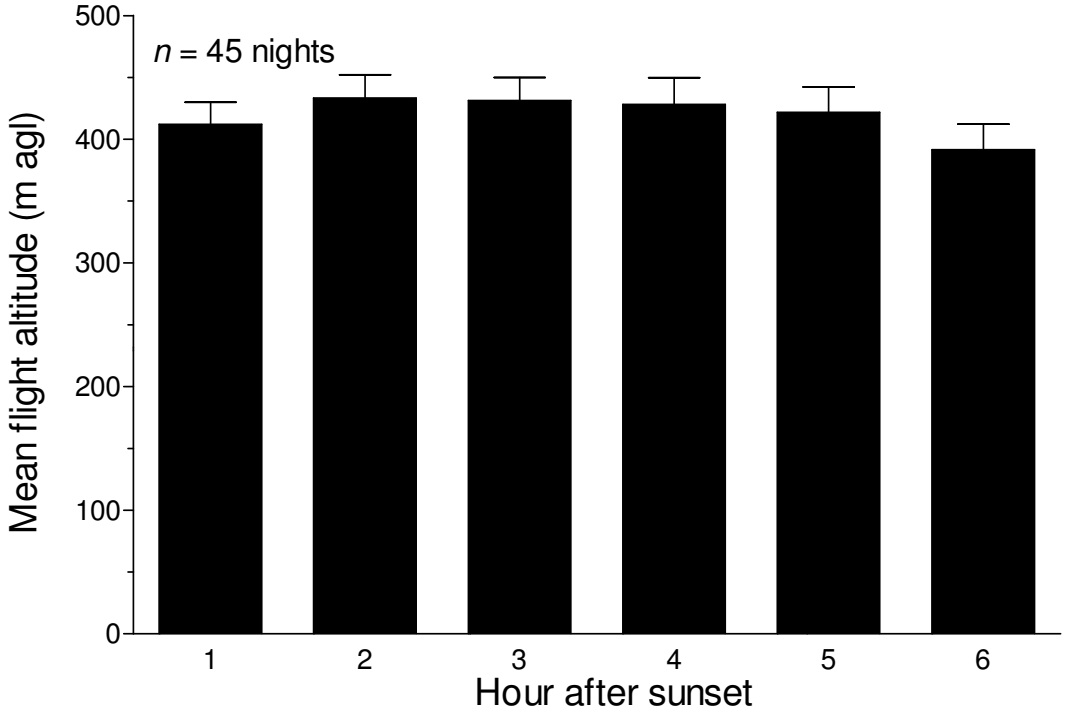

Figure 9. Mean flight altitude (± 1 SE) relative to time past sunset for nights with full sampling at the proposed Coyote Crest Wind Power Project, Washington, fall 2008.

Table 1. Nocturnal flight altitudes of radar targets (% of all targets) detected at the 1.5-km range at the proposed Coyote Crest Wind Power Project, Washington, fall 2008, by 100 m agl flight altitude category.

	Percent radar targets (n = 10,980 targets)	
Flight altitude (m)	Per category	Cumulative
1–100	6.9	6.9
101–200	13.9	20.8
201–300	15.9	36.7
301–400	15.2	51.9
401–500	12.2	64.1
501–600	8.8	72.9
601–700	6.8	79.6
701–800	5.5	85.2
801–900	4.8	90.0
901–1,000	3.9	93.9
1,001–1,100	2.7	96.6
1,101–1,200	1.7	98.4
1,201–1,300	0.9	99.3
1,301–1,400	0.6	99.9
1,401–1,500	0.1	100.0

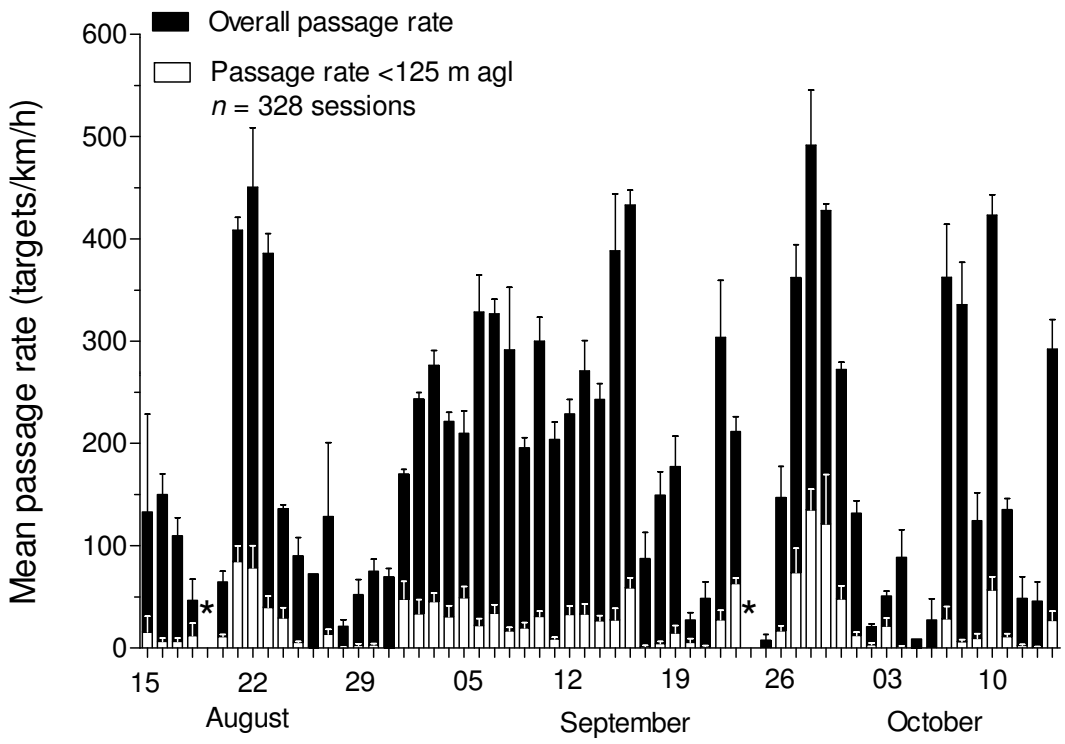

Figure 10. Mean ± 1 SE nightly below 125 m agl passage rates (targets/km/h) at the proposed Coyote Crest Wind Power Project, Washington, fall 2008. Asterisks (*) denote nights not sampled because of rain.

Table 2. Linear mixed model estimates from competitive models ($\Delta AIC_c \leq 2$) explaining the influence of environmental factors on passage rates (surveillance radar, n = 328 sampling sessions) and flight altitudes (vertical radar, n = 314 sampling sessions) of radar targets at the proposed Coyote Crest Wind Power Project, Washington, fall 2008. Model weights (w_i) were based on Akaike's Information Criterion (AIC).

Analysis/Model	-2 Log Likelihood[a]	K[b]	AIC_c[c]	ΔAIC_c[d]	w_i[e]
Rates					
Wind direction + ceiling height	1,737.00	14	1,766.34	0.00	0.33
Ceiling height	1,747.13	10	1,767.82	1.48	0.16
Flight altitudes					
Lunar illumination*cloud cover + date	1,474.21	12	1,499.25	0.00	0.44
Wind direction + date	1,473.38	13	1,500.59	1.35	0.23

[a] Calculated with the Maximum Likelihood method.
[b] Number of estimable parameters in approximating model (see methods for explanation).
[c] Akaike's Information Criterion corrected for small sample size.
[d] Difference in value between AIC_c of the current model versus the best approximating model with the minimal AIC_c value.
[e] Akaike weight—probability that the current model (i) is the best approximating model among those being considered.

Table 3. Model-averaged parameter estimates from competitive models (Δ AIC$_c \leq 2$) explaining the influence of environmental factors on passage rates and flight altitudes of radar targets at the proposed Coyote Crest Wind Power Project, Washington, fall 2008.

Analysis/parameter	B[a]	SE[b]
Passage rates		
Intercept	13.329	1.350*
Ceiling height = 0–50 m agl (fog)	-2.893	0.735*
Ceiling height = 51–500 m agl	-1.240	0.884
Wind direction = tailwind	1.946	0.810*
Wind direction = tailwind*wind speed	0.109	0.184
Wind direction = calm	2.838	0.998*
Wind direction = calm*wind speed	-1.220	0.953
Wind direction = eastern crosswind	2.268	1.265
Wind direction = eastern crosswind*wind speed	0.469	0.312
Wind direction = western crosswind	0.670	0.869
Wind direction = western crosswind*wind speed	0.210	0.237
Flight altitude		
Intercept	16.940	0.807*
Lunar illumination*cloud cover	-0.011	0.010
Date	0.059	0.015*
Wind direction = tailwind	1.732	0.954
Wind direction = tailwind*wind speed	0.187	0.143
Wind direction = calm	0.610	1.219
Wind direction = calm*wind speed	0.690	0.762
Wind direction = eastern crosswind	1.268	1.100
Wind direction = eastern crosswind*wind speed	-0.092	0.241
Wind direction = western crosswind	1.327	0.848
Wind direction = western crosswind*wind speed	0.002	0.181

[a] Coefficients (B) of the categorical variables, ceiling height and wind direction were calculated relative to ceiling height > 500 m agl and a headwind respectively.

[b] Asterisks (*) indicate 95% confidence intervals that do not overlap zero.

duration, and weaker relationships with the other variables (Table 3). The weight of evidence in favor of the "best" model ($w_{best}/w_{second\ best}$) was 1.9 times that of the second-best model (Burnham and Anderson 2002). The complete flight altitude model set can be found in Appendix 4 for the reader interested in examining all models and their associated statistical metrics.

TARGETS WITHIN THE PROPOSED TURBINE AREA

We made several assumptions to estimate the turbine passage rate (i.e., the number of targets that would pass within the area occupied by each proposed turbine): (1) the minimal area occupied by the wind turbine (i.e., side profile), (2) the maximal area occupied by the wind turbine (i.e., front profile, including the entire rotor-swept area), (3) a worst-case scenario of the rotor blades turning constantly, and (4) an average of 10 nocturnal hours/night across the 60-night fall study period. If all migrants approached the turbines from the side, an estimated 100 migrants would have passed within the area occupied by each turbine (Appendix 5). If all migrants approached the turbines from the front, an estimated 951 migrants would have passed within the area occupied by each turbine during our fall study period (Appendix 5). An alternate way to look at this relationship is on a per night basis; these estimates

would be equivalent to an estimate of 1.7–15.9 migrants passing through the area of a single turbine each night (Appendix 5).

VISUAL OBSERVATIONS

We conducted 9,265 min of night-vision surveys over 45 nights during the fall study period. We observed a total of 479 birds and bats (93% identifiable, n = 444), and most individuals identified (89%) were birds (11% of individuals identified were bats; Table 4). Of the birds that could be identified to species group (n = 331 birds), a majority (75%) were passerines. Of bats that could be classified by size (n = 35 bats), small bats outnumbered large bats by approximately 2:1 (Table 4). Birds were observed with night-vision sampling equipment on 32 of the 45 nights (71%) that weather did not prevent visual sampling, and bats were observed on 20 (44%) of these nights.

Mean nightly visual observation rates were generally low for bats and highly variable for birds (Fig. 11). Highest observation rates of birds occurred on 30 September (18.0 birds/h). Mean nocturnal visual rates across the study period were 2.2 ± 0.5 birds/h and 0.5 ± 0.2 bats/h during the fall (n = 45 nights). In the fall, bird observation rates did not differ among hours of the night ($F_{birds,\ 1.1,\ 27.7}$ = 0.665, P = 0.437, n = 26 nights; Fig. 12) Numbers of bats observed were too few to test differences among hours of the night. Our observations indicate birds were predominantly flying south (Fig. 13; median flight direction = 180°) and flight directions of the small numbers of bats were oriented to the south and east (Fig. 13; median flight direction = 135°).

DISCUSSION

Wind energy is a promising source of renewable energy and one of the fastest growing sectors of energy production in the US (GAO 2005, EIA 2007). In an increasing number of states there are mandates to encourage development of alternative energies and increase the proportion of energy derived from renewable sources. In light of the potential for bird and bat fatalities at new and existing wind generating facilities the state of Washington has published a set of voluntary guidelines that provide state-wide

Table 4. Numbers of birds and bats observed during nocturnal visual sampling at the proposed Coyote Crest Wind Power Project, Washington, fall 2008. Percentages are relative to the total number of animals identifiable as birds or bats.

	Visual observations	
Species group	*n*	%
Birds		
Passerines	244	55.0
Shorebirds	5	1.1
Waterfowl	82	18.5
Unidentified non-passerines	32	7.2
Unidentified birds	31	7.0
Total	*394*	*88.7*
Bats		
Small bats	23	5.2
Large bats	12	2.7
Unidentified bats	15	3.4
Total	*50*	*11.3*
Total birds and bats	444	100.0

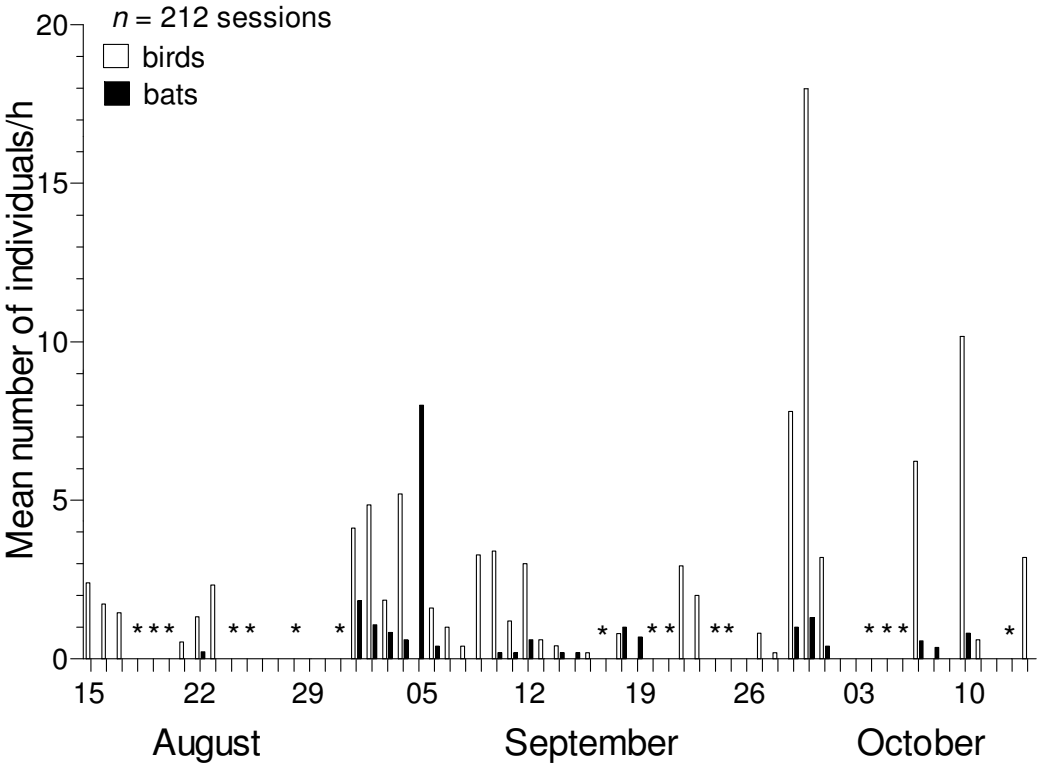

Figure 11. Mean nightly movement rate of birds and bats/h (± 1 SE) observed during visual sampling at the proposed Coyote Crest Wind Power Project, Washington, fall 2008. Asterisks denote nights not sampled because of fog or rain.

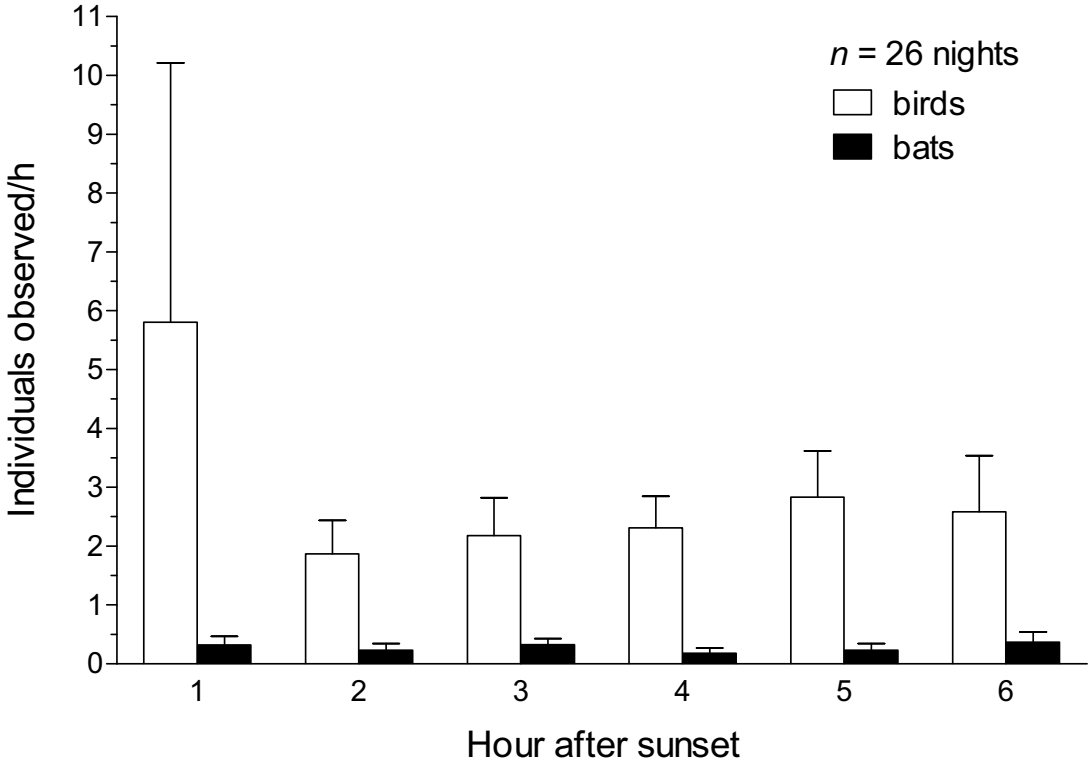

Figure 12. Mean number of birds/h or bats/h (± 1 SE) observed during nights with 6h of visual sampling relative to time past sunset at the proposed Coyote Crest Wind Power Project, Washington, fall 2008.

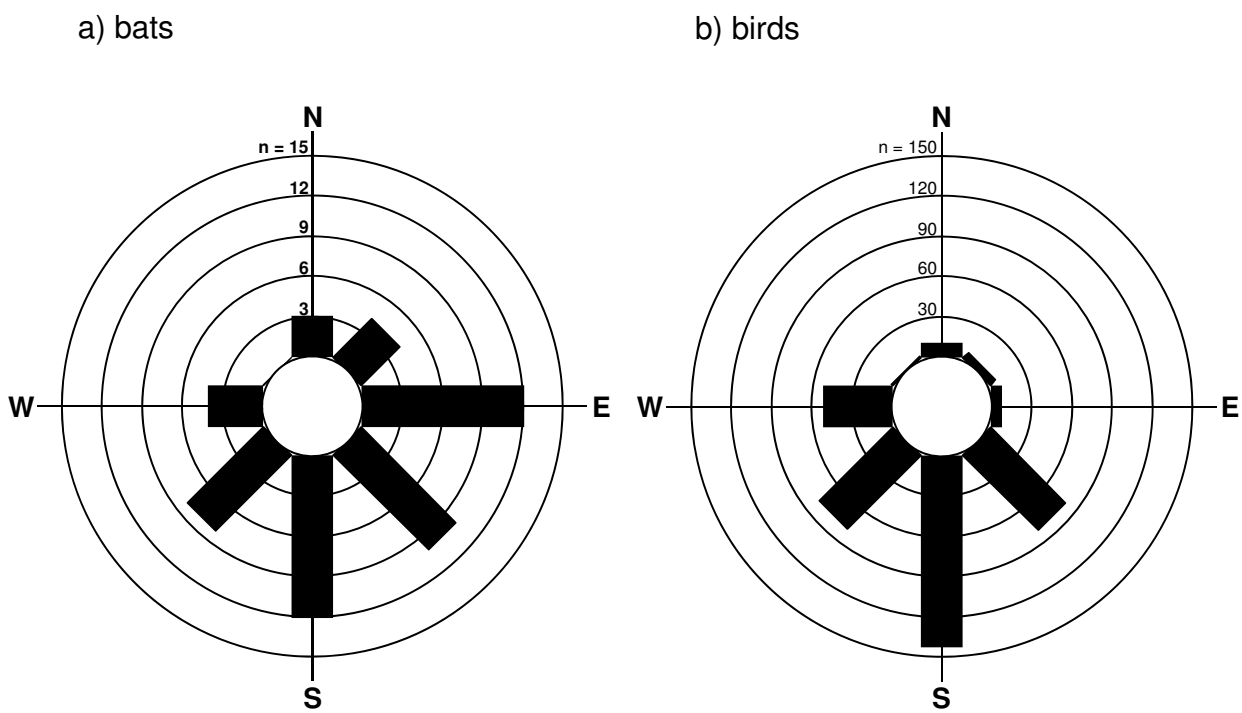

Figure 13. Flight directions of birds and bats observed during visual sampling at the proposed Coyote Crest Wind Power Project, Washington, fall 2008.

recommendations on siting, baseline and operational monitoring, and habitat mitigation at proposed wind power developments (WDFW 2009).

Predictions of the effects of wind power development on migratory birds and bats, however, are hampered by many factors including a lack of basic information on their relative abundance at low altitudes; their flight altitudes relative to wind turbine RSA's; their flight behaviors around turbines (i.e., their ability to detect and avoid structures); and an understanding of the causal relationships between pre-construction abundance and post-construction fatalities at wind developments. Until post-construction studies conduct radar and visual studies concurrent with fatality studies it will not be possible to make accurate predictions on the expected number of bird and bat fatalities at proposed wind developments. In this study we documented some of the key characteristics of nocturnal migration of birds and bats at the proposed site and describe studies from both similar and distant regions to provide as much context to these results as possible.

Our results can be compared with those of similar studies in the region as an initial assessment of geographic differences in migration characteristics; however, additional assumptions must be considered before making this assessment. Methodological differences among studies often hamper appropriate comparisons of results and such differences may include type of radar used, radar settings (e.g., gain and ground clutter reduction), data collection techniques (manual vs. automated), criteria for removal of insects, and data analyses. The overall comparability among studies can be determined by assessing the methodological similarities, the study period, the sampling effort, and the study location (see Appendix 6).

TIMING OF MIGRATION

Understanding the timing of animal movements at multiple temporal scales (e.g., within nights, within seasons, and seasonally within years) allows the determination of patterns of peak movements that may be useful information for both pre-construction siting decisions and for

operational strategies to reduce fatalities (if animal abundance and fatalities are correlated). Several radar studies have found a pattern in which the intensity of avian nocturnal migration begins to increase ~30–60 min after sunset, peaks around midnight, and then either levels off (Mabee et al. 2005b, 2006a, 2006b; Plissner et al. 2006a, 2006b, 2006c) or declines steadily thereafter until dawn (Lowery 1951, Gauthreaux 1971, Kerlinger 1995, Farnsworth et al. 2004, Mabee et al. 2006a), although in this study passage rates appeared similar across all hours sampled during fall migration.

The proposed CCWPP is located in an area with a diverse community of migratory bird species including songbirds, shorebirds (possibly), and waterfowl and the timing and intensity of migration will differ among these avian species groups. Based on the fact that songbirds comprise the majority of known collisions with wind farms (Osborn et al. 2000; Erickson et al. 2001, 2002; Manville 2005) we selected our span of study dates (15 August to 14 October) to coincide with the peak of songbird migration in this region and during the period when shorebirds, waterfowl and bats would also be expected to be migrating through the area.

Within a season, migration generally occurs in pulses and the intensity of migration may differ greatly from one night to the next (Alerstam 1990, Mabee and Cooper 2004, Mabee et al. 2006a). Clearly this was the case during fall migration at the proposed CCWPP. We recorded mean nightly passage rates >2 SD of the seasonal mean on a single night (28 September), when nightly fall migration rates peaked with 492 targets/km/h.

PASSAGE RATES

Passage rates are an index of the number of targets (birds and bats) flying past a location and are a widely-used metric in studies of migration activity at proposed wind power developments (Mabee et al. 2006a). Thus, documenting passage rates allows for comparisons of relative bird use among different sites and regions. In this study, we used the passage-rate data in two ways: (1) to examine the passage rate of all migrants passing over the study site, and (2) to examine the passage rate of migrants within the height of the proposed wind turbines (<125 m agl). Although both metrics are useful for characterizing bird activity at proposed wind power developments and existing windfarms, the second metric is especially well-suited for these comparisons since it describes migration activity within the vertical range of new generation wind turbines such as those proposed for installation at the CCWPP.

In this study, mean passage rates were 196 ± 18 targets/km/h and were higher than the only other studies available for comparison in Washington, the Nine Canyon and Stateline wind developments (i.e., 31 ± 5 targets/km/h. 21 ± 2 targets/km/h, 22 ± 3 targets/km/h; Appendix 6), the Vansycle wind development in Oregon (19 ± 2 targets/km/h, 26 ± 3 targets/km/h; Appendix 6), and Cotterel Mt. wind development in Idaho (32 ± 9 targets/km/h; Appendix 6). The Stateline, Vansycle, and Nine Canyon sites are located on the east side of the Cascades in shrub-steppe and agricultural habitats (similar to Cotterel Mt.) and hence are not similar in topography and habitat to the CCWPP. In contrast, the mean passage rates from the CCWPP were lower than, but much closer to passage rates at the two proposed wind development sites in California; Bear River (269 ± 11 targets/km/h) and Hatchet Ridge (290 ± 26 targets/km/h; Appendix 6). These locations are more similar to the CCWPP because they occur along mountainous regions. We emphasize the lack of directly comparable studies from the Pacific Northwest for comparison in this region, highlighting the general lack of information on nocturnal migration rates in the Western US, and warranting the cautious interpretation of results. For comparison at a continental scale, fall passage rates ranged from 64–661 targets/km/h at sites with comparable data in Eastern US (Appendix 6).

Within the range of the proposed turbine heights (<125 m agl) the mean altitude-specific passage rates (i.e., targets <125 m agl) during our study was 27 ± 4 targets/km/h. Unfortunately, it is impossible to make comparisons to the Stateline and Vansycle projects because of differences in methods, although the low-altitude passage rates from these studies would undoubtedly be low because of their overall low passage rates. In California, the Bear River (35 ± 3 targets/km/h) and Hatchet Ridge (28 ± 4 targets/km/h) sites had

similar low-altitude passage rates (Appendix 6). Beyond the Pacific Northwest, the only other fall migration studies with comparable altitude-specific data below 125 m agl are from the Eastern US and range between 11 and 47 targets/km/h (Appendix 6). We emphasize the same caution as previously mentioned when making comparisons across regions.

FLIGHT ALTITUDES

Flight altitudes are critical for understanding the vertical distribution of nocturnal migrants in the airspace. In general, passerines migrate at lower flight altitudes than do other major groups of over-land migrants such as shorebirds and waterfowl (Kerlinger 1995). Large kills of birds at tall, human-made structures (generally lighted and guyed communications towers; Avery et al. 1980) and the predominance of nocturnal migrant passerines at such kills (Manville 2000; Longcore et al. 2005) indicate that large numbers of these birds fly <500 m agl on at least some nights and their flight altitude may be influenced by lights on the towers. Based on radar studies, however, most nocturnal migration occurs below ~ 1–1.5 km agl (Larkin 2006, Mabee and Cooper 2004, Mabee et al. 2006a, CUROL 2007). Our results from the vertical distribution of radar targets in this study and those from other published studies indicate that the majority of nocturnal migrants fly below 600 m agl (Bellrose 1971; Gauthreaux 1972, 1978, 1991; Bruderer and Steidinger 1972; Cooper and Ritchie 1995, Kerlinger 1995).

Flight altitudes of migratory bats are poorly known and mostly anecdotal (Reynolds 2006, Arnett et al. 2008). Allen (1939) observed bats migrating during the day near Washington, D.C., at 46–140 m agl, Altringham (1996) reported some bats migrating well above 100 m agl, and Peurach (2003) documented a hoary bat collision with an airplane at 2,438 m agl over Oklahoma in October. Hoary bats, eastern red bats, and silver-haired bats are all long-range migrants that have been killed at wind power projects during their migratory periods, suggesting that at least some individuals fly below ~125 m agl during migration. Foraging, roost selection, or mating behaviors during may explain low flight altitudes and consequently bat/turbine interactions.

Similar to our migration studies elsewhere (Cooper et al. 1995a, 1995b; Cooper and Mabee 2000; Mabee and Cooper 2004; Mabee et al. 2006a), we recorded large among-night variation in mean flight altitudes during fall migration, although mean flight altitudes always were above the proposed turbine heights. Daily variation in mean flight altitudes may have reflected changes in species composition, vertical structure of the atmosphere, and/or weather conditions. Variation among days in the flight altitudes of migrants at other locations has been associated primarily with changes in the vertical structure of the atmosphere. For example, birds crossing the Gulf of Mexico appear to fly at altitudes where favorable winds minimize the energetic cost of migration (Gauthreaux 1991). Kerlinger and Moore (1989), Bruderer et al. (1995), and Liechti et al. (2000) have concluded that atmospheric structure is the primary selective force determining the height at which migrating birds fly.

The mean flight altitude (454 ± 3 m agl), was ~329 m higher than the height of the proposed turbines (~125 m). Mean flight altitudes from this study were lower than at other sites in the Pacific Northwest (Stateline 647 m agl, Vansycle 606 m agl, and Cotterel Mt. 565 m agl) but were more similar to those from California (Bear River 329 m agl, Hatchet Ridge 468 m agl; Appendix 6). Values from this study fell in the middle of values from comparable studies in the Eastern US (333–516 m agl; Appendix 6).

We also examined the percentage of targets below the proposed maximal turbine height (i.e., <125 m agl) and calculated that 10% of targets flew <125 m agl during the sampling period (Appendix 6). These percentages were higher than those from other studies in the Pacific Northwest [Stateline (3%), Vansycle (9%), Cotterel Mt. (3%)], similar to those from California [Bear River (11%), Hatchet Ridge (8%)] and within the range of those from the Eastern US (3–13%; Appendix 6).

MODELING MIGRATION PASSAGE RATES AND FLIGHT ALTITUDES

PASSAGE RATES

It is a well-known fact that general weather patterns and their associated temperatures and

winds affect migration (Richardson 1978, 1990, Gauthreaux et al. 2005). In the Northern Hemisphere, air moves counterclockwise around low-pressure systems and clockwise around high-pressure systems. Thus, winds are warm and southerly when an area is affected by a low to the west or a high to the east and are cool and northerly in the reverse situation. Clouds, precipitation, and strong, variable winds are typical in the centers of lows and near fronts between weather systems, whereas weather usually is fair with weak or moderate winds in high-pressure areas. Numerous studies in the Northern Hemisphere have shown that, in fall, most bird migration tends to occur in the western parts of lows, the eastern or central parts of highs, or in intervening transitional areas. In contrast, warm fronts, which are accompanied by southerly (unfavorable) winds and warmer temperatures, tend to slow fall migration (Lowery 1951, Gauthreaux 1971; Able 1973, 1974; Blokpoel and Gauthier 1974, Richardson 1990, Gauthreaux et al. 2005). Conversely, more intense spring migration tends to occur in the eastern parts of lows, the western or central parts of highs, or in intervening transitional areas.

We examined the influence of weather (i.e., wind direction, wind speed * wind direction, ceiling height [including fog], synoptic (macro-scale) weather, [nights since favorable migration—passage rate models only]), lunar illumination (percent illumination * cloud cover), station, and date on migration passage rates and flight altitudes. During the fall sampling period, passage rates decreased during fog conditions and increased during tailwinds or when weather was benign.

FLIGHT ALTITUDES

Radar studies have shown that wind is a key factor in migratory flight altitudes (Alerstam 1990). Birds fly mainly at heights at which head winds are minimized and tail winds are maximized (Bruderer et al. 1995). Because wind strength generally increases with altitude, bird migration generally takes place at lower altitudes in head winds and at higher altitudes in tail winds (Alerstam 1990). Most studies (all of those cited above except Bellrose 1971) have found that clouds influence flight altitude, but the results are not consistent among studies. For instance, some studies (Bellrose and Graber 1963, Hassler et al. 1963, Blokpoel and Burton 1975) found that birds flew both below and above cloud layers, whereas others (Nisbet 1963, Able 1970) found that birds tended to fly below clouds.

In this study, flight altitudes increased over the study duration and showed weaker (i.e. not statistically significant but biologically relevant) relationships such as increasing with tailwinds. Flight altitudes tend to increase under tailwind conditions (Alerstam 1990) consistent with our findings. Although no strong association was apparent between ceiling height (including fog) and flight altitudes in this study, understanding how nocturnal migrants respond to fog and low ceiling height conditions is important. The largest single-night kill reported for nocturnal avian migrants at a wind power project in the US occurred on a foggy night during spring migration, when 27 passerines fatally collided with a turbine near a lit substation at the Mountaineer wind power development in West Virginia (Kerlinger 2003). Fatality events of this magnitude are rare at wind power developments, although large kills of migratory birds have sporadically occurred at other, taller structures (e.g., guyed and lighted towers >130 m high) in many places across the country during periods of heavy migration, especially on foggy, overcast nights in fall (Weir 1976, Avery et al. 1980, Evans 1998, Trapp 1998, Erickson et al. 2001) and have occurred under similar conditions at an offshore platform in Germany (Huppop et al. 2006).

IDENTIFICATION OF MIGRATORY BIRDS AND BATS

Observations at existing windfarms and other tall man-made structures indicate that certain species groups are at greater risk of collision with structures, particularly migratory songbirds and bats (Manville 2005). Determination of species-specific risks to nocturnal migrants requires the identification of species migrating through the area of interest. Our visual observations confirmed the dominance of passerines (~55% of all birds and bats) and to a lesser degree waterfowl (~18% of all birds and bats).

We compared the relative proportions and movement rates of birds and bats at the CCWPP to the Bear River project in California (the only other study in the western US with comparable data) and found similar proportions of birds and bats (Appendix 7) but higher movement rates of birds and bats (Appendix 8). Comparisons to other wind development areas in the northeastern US shows similarly low proportions of bats to birds, as was observed at many other fall studies (Appendix 7) and a wide range of movement rates for birds and bats (Appendix 8). In this study we also observed low numbers of both smaller bats (e.g., *Myotis* spp.) and larger bats (including hoary, silver-haired and big brown bats), similar to many other studies in the US.

TARGETS WITHIN THE PROPOSED TURBINE AREA

In this study we calculated a turbine passage rate index (number of birds and bats passing within the area occupied by each turbine each night) of 1.7–15.9 nocturnal migrants/turbine/d (Appendix 5). We compared these rates to studies from California (the only other location with comparable data in the Western US) at Bear River (~2–17) and Hatchet Ridge (~2–16) and found very similar results (Appendix 9). In the Eastern US, turbine passage rates ranged from 1–4 (side profile) to 5–29 (front profile) nocturnal migrants/turbine/d (Appendix 9).

Estimated turbine passage rates may be considered as a starting point for developing a complete avian and bat risk assessment. Currently, however, it is unknown whether the abundance of either birds or bats is strongly correlated with fatality rates at wind power developments. There are a variety of factors (e.g., weather) that may correlate more strongly with fatality rates than do numbers of individuals present prior to project construction. Studies of concurrent bird/bat use, weather, and fatality data at operational wind power developments would be necessary to determine whether bird use and/or weather conditions can be used to predict the likelihood of bird/bat fatalities at such developments.

In addition to these questions about the unknown relationships among abundance, weather, and fatality, there also are few data available on the proportion of nocturnal migrants that (1) do not collide with turbines because of their avoidance behavior (i.e., birds that alter either their flight directions or altitude to avoid colliding with turbines) and (2) safely pass through the turbine blades by chance alone—a proportion that will vary with the speed at which turbine blades are turning as well as with the flight speeds of individual migrants. The accuracy of fatality estimates relies heavily upon avoidance rates (Chamberlain et al. 2006). The proportion of nocturnal migrants that detect and avoid turbines is currently unknown in the US (but see Winkleman 1995 and Desholm and Kahlert 2005 for studies in Europe), and there are no empirical data that predict a species' ability to pass safely through the rotor-swept area of a turbine (but see Tucker 1996, Desholm et al. 2006, Whitfield and Madders 2006, and Band et al. 2007 for proposed methods to address this question). We speculate, however, that most birds are able to detect and/or avoid turbines, considering the low avian fatality rates reported at existing wind power developments in the US (Erickson et al. 2002, Strickland and Johnson 2006) and the high percentage of waterbirds that avoided an offshore windfarm in Denmark (Desholm et al. 2006).

SUMMARY

This study focused on nocturnal migration patterns of targets (i.e., birds and bats) during the peak period of fall passerine migration, at the proposed Coyote Crest Wind Power Project in Washington. The key results of our study were as follows: (1) the mean passage rate was 196 ± 18 targets/km/h; (2) mean nightly passage rates were variable among nights and ranged from 8–492 targets/km/h; (3) mean flight altitude was 454 ± 3 m agl; (4) the percentage of targets passing below 125 m agl was 10%; (5) the target passage rate below 125 m agl was 27 ± 4 targets/km/h; and (6) the estimated turbine passage rate of nocturnal migrants passing within the airspace occupied by each proposed turbine was 1.7–15.9 nocturnal migrants/turbine/d.

LITERATURE CITED

Able, K. P. 1970. A radar study of the altitude of nocturnal passerine migration. Bird-Banding 41: 282–290.

Able, K. P. 1973. The role of weather variables and flight direction in determining the magnitude of nocturnal migration. Ecology 54: 1031–1041.

Able, K. P. 1974. Environmental influences on the orientation of free-flying nocturnal bird migrants. Animal Behaviour 22: 224–238.

Alerstam, T. 1990. Bird migration. Cambridge University Press, Cambridge, United Kingdom. 420 pp.

Allen, G.M. 1939. Bats. Dover Publications, New York, NY. 358 pp.

Altringham, J. D. 1996. Bats: biology and behavior. Oxford University Press, Inc., New York, NY 262 pp.

Anderson, R., M. Morrison, K. Sinclair, and D. Strickland. 1999. Studying wind energy/bird interactions: a guidance document. Metrics and methods for determine or monitoring potential impacts on birds at existing and proposed wind energy sites. National Wind Coordinating Committee, Washington, DC. 87 pp. Available at http://www.nationalwind.org/pubs/default.htm

Arnett, E. B., technical editor. 2005. Relationships between bats and wind turbines in Pennsylvania and West Virginia: an assessment of bat fatality search protocols, patterns of fatality, and behavioral interactions with wind turbines. Unpublished report prepared for Bats and Wind Energy Cooperative. Bat Conservation International, Austin, TX. 187 pp.

Arnett, E.B., W.K. Brown, W.P. Erickson, J.K. Fiedler, B.L. Hamilton, T.H. Henry, A. Jain, G.D. Johnson, J. Kerns, R.R. Koford, C.P. Nicholson, T.J. O'Connell, M.D. Piorkowski, R.D. Tankersley, Jr. 2008. Patterns of bat fatalities at wind energy facilities in North America. Journal of Wildlife Management 72: 61–78.

Avery, M. L., P. F. Springer, and N. S. Dailey. 1980. Avian mortality at manmade structures: an annotated bibliography (revised). U.S. Fish and Wildlife Service, Biological Services Program, Report No. FWS/OBS–80/54. 152 pp.

Band, W., M. Madders, and D. P. Whitfield. 2007. Developing field and analytical methods to assess avian collision risk at wind farms. Pages 259–275 *in* de Lucas, M., Janss, G. F. E., and Ferrer, M., eds. Birds and wind farms. Quercus, Madrid, Spain.

Barclay, M. R., E. F. Baerwald, and J. C. Gruver. 2007. Variation in bat and bird fatalities at wind energy facilities: assessing the effects of rotor size and tower height. Canadian Journal of Zoology. 85:381–387.

Bellrose, F. C. 1971. The distribution of nocturnal migration in the air space. Auk 88: 397–424.

Bellrose, F. C. 1976. Ducks, geese, and swans of North America. 2nd ed. Stackpole Books, Harrisburg, PA. 540 pp.

Bellrose, F. C., and R. R. Graber. 1963. A radar study of flight directions of nocturnal migrants. Proceedings XIII International Ornithological Congress. pp. 362–389.

Blokpoel, H., and J. Burton. 1975. Weather and the height of nocturnal migration in east-central Alberta: a radar study. Bird-Banding 46: 311–328.

Blokpoel, H., and M. C. Gauthier. 1974. Migration of lesser Snow and Blue geese in spring across southern Manitoba, Part 2: Influence of weather and prediction of major flights. Canadian Wildlife Service Report Series 32: 1–28.

Bruderer, B., and A. Boldt. 2001. Flight characteristics of birds I. Radar measurements of speeds. Ibis 143: 178–204.

Bruderer, B., and P. Steidinger. 1972. Methods of quantitative and qualitative analysis of bird migration with a tracking radar. Pages 151–168 *in* Galler, S.R., Schmidt-Koenig, K.,

Jacobs, G.S., Belleville, R.E., eds. Animal orientation and navigation: a symposium. NASA SP262. U.S. Government Printing Office, Washington, DC.

Bruderer, B., T. Steuri, and M. Baumgartner. 1995. Short-range high-precision surveillance of nocturnal migration and tracking of single targets. Israeli Journal of Zoology 41: 207–220.

Burnham, K. P., and D. R. Anderson. 2002. Model selection and multimodel inference: a practical information-theoretic approach. Second edition. Springer-Verlag, New York, NY. 488 pp.

CEC and CDFG (California Energy Commission and California Department of Fish and Game). 2007. California Guidelines for Reducing Impacts to Birds and Bats from Wind Energy Development. Committee final Draft Report. California Energy Commission, Renewables committee, and Energy Facilities siting Division and California Department of Fish and Game, Resources Management and Policy Division. CEC-700-2007-008-CTF. Available at www.energy.ca.gov/2007publications/CEC-700-2007-008/CEC-700-2007-008-CTF-MINUS-APF.PDF (Viewed January 2008).

Chamberlain, D. E., M. R. Rehfisch, A. D. Fox, M. Desholm, and S. J. Anthony. 2006. The effect of avoidance rates on bird mortality predictions made by wind turbine collision risk models. Ibis:148:198–202.

Cooper, B. A., R. H. Day, R. J. Ritchie, and C. L. Cranor. 1991. An improved marine radar system for studies of bird migration. Journal of Field Ornithology 62: 367–377.

Cooper, B. A., and R. J. Ritchie. 1995. The altitude of bird migration in east-central Alaska: a radar and visual study. Journal of Field Ornithology 66: 590–608.

Cooper, B. A., C. B. Johnson, and R. J. Ritchie. 1995a. Bird migration near existing and proposed wind turbine sites in the eastern Lake Ontario region. Unpublished report prepared for Niagara–Mohawk Power Corporation, Syracuse, NY, by ABR, Inc., Forest Grove, OR. 71 pp.

Cooper, B. A., C. B. Johnson, and E. F. Neuhauser. 1995b. The impact of wind turbines in upstate New York. Pages 607–611 *in* LGL Ltd. ed. Proceedings of National Avian-Wind Power planning meeting II September 1995, Washington, DC. Available at http://www.nationalwind.org/pubs/avian95/default.htm

Cooper, B. A., and T. J. Mabee. 2000. Bird migration near proposed wind turbine sites at Wethersfield and Harrisburg, New York. Unpublished report prepared for Niagara–Mohawk Power Corporation, Syracuse, NY, by ABR, Inc., Forest Grove, OR. 46 pp.

Cooper, B.A., R.J. Blaha, T.J. Mabee, and J.H. Plissner. 2004a. Cotterel Mt., ID Fall 2004. A radar study of nocturnal bird migration at the proposed Cotterel Mountain wind-energy facility, Idaho, fall 2003. Unpublished report prepared for Windland, Inc. Boise, ID by ABR, Inc., Forest Grove, OR. 24 pp.

Cooper, B. A., A. A. Stickney, T. J. Mabee, and J. E. Shook. 2004b. A visual and radar study of 2003 spring bird migration at the proposed Chautauqua wind energy facility, New York. Unpublished report prepared for Chautauqua Windpower LLC, Lancaster, NY, by ABR, Inc.—Environmental Research & Services, Forest Grove, OR. 39 pp.

Cryan, P. M., and A. C. Brown. 2007. Migration of bats past a remote island offers clues toward the problem of bat fatalites at wind turbines. Biological Conservation 139:1–11.

CUROL (Clemson Lab of Ornithology). 2007. Migrating birds: typical distribution of migrants with altitude. http://virtual.clemson.edu/groups/birdrad/COM4A.HTM (Viewed January 2008).

Diehl, R.H., R.P. Larkin, and J.E. Black. 2003. Radar obeservations of bird migration over the Great Lakes. Auk 120:278–290.

Desholm, M., A. D. Fox, P. D. L. Beasley, and J. Kahlert. 2006. Remote techniques for counting and estimating the number of bird-wind turbine collisions at sea: a review. Ibis:148:76–89.

Desholm, M. and J. Kahlert. 2005. Avian collision risk at an offshore windfarm. Biology Letters 1:296–298.

Eastwood, E. 1967. Radar ornithology. Methuen and Co., Ltd., London, United Kingdom. 278 pp.

EIA (Energy Information Administration). 2007. Annual energy outlook 2007 with projections to 2030. DOE/EIA-0383(2007). Available at www.eia.doe.gov/oiaf/aeo/index.html (Viewed January 2008).

Erickson, W. 2004. Patterns of daily mortality searches at Meyersdale, Pennsylvania. Talk presented at the National Wind Coordinating Committee meeting, "Onshore wildlife interactions with wind developments: Research Meeting V", 3–4 November 2004, Lansdowne, Virginia.

Erickson, W. P., G. D. Johnson, M. D. Strickland, D. P. Young, Jr., K. J. Sernka, and R. E. Good. 2001. Avian collisions with wind turbines: a summary of existing studies and comparisons to other sources of avian collision mortality in the United States. National Wind Coordinating Committee, Washington, DC. 62 pp. Available at http://www.nationalwind.org/pubs/default.htm

Erickson, W. P., G. D. Johnson, D. P. Young, Jr., M. D. Strickland, R. E. Good, M. Bourassa, K. Bay, and K. Sernka. 2002. Synthesis and comparison of baseline avian and bat use, raptor nesting, and mortality information from proposed and existing wind developments. Unpublished report prepared for Bonneville Power Administration, Portland, OR, by WEST, Inc., Cheyenne, WY. 124 pp.

Evans, W. E. 1998. Deadly towers. Living Bird 17: 5.

Farnsworth, A., S. A. Gauthreaux, Jr., and D. van Blaricon. 2004. A comparison of nocturnal call counts of migrating birds and reflectivity measurements on Doppler radar. Journal of Avian Biology 35:365–369.

Fiedler, J. K. 2004. Assessment of bat mortality and activity at Buffalo Mountain wind facility, eastern Tennessee. Thesis, University of Tennessee, Knoxville.

Fiedler, J. K., T. H. Henry, C. P. Nicholson, and R. D. Tankersley. 2007. Results of bat and bird mortality monitoring at the expanded Buffalo Mountain Windfarm, 2005. Tennessee Valley Authority, Knoxville, TN.

GAO (U.S. Government Accountability Office). 2005. Impacts on wildlife and government responsibilities for regulating development and protecting wildlife. Report for the United States Congress by the U.S. Government Accountability Office, Washington D.C. Available at www.gao.gov/new.items/d05906.pdf (Viewed January 2008).

Gauthreaux, S. A., Jr. 1971. A radar and direct visual study of passerine spring migration in southern Louisiana. Auk 88: 343–365.

Gauthreaux, S. A., Jr. 1972. Behavioral responses of migrating birds to daylight and darkness: a radar and direct visual study. Wilson Bulletin 84: 136–148.

Gauthreaux, S. A. Jr. 1975. Radar ornithology: bird echoes on weather and airport surveillance radars. Clemson University Press, Clemson, SC.

Gauthreaux, S. A., Jr. 1978. Migratory behavior and flight patterns. Pages 12–26 *in* M. Avery, ed. Impacts of transmission lines on birds in flight. U.S. Fish and Wildlife Service, Office of Biological Services, Report No. FWS/OBS–78/48. 151 pp.

Gauthreaux, S. A., Jr. 1980. Direct visual and radar methods for the detection, quantification, and prediction of bird migration. Special publication no. 2, Department of Zoology, Clemson University, Clemson, SC.

Gauthreaux, S. A., Jr. 1985a. Radar, electro-optical, and visual methods of studying bird flight near transmission lines. Unpublished final report prepared for Electric Power Research Institute, Palo Alto, CA, by Clemson University, Clemson, SC. 76 pp.

Gauthreaux, S. A., Jr. 1985b. An avian mobile research laboratory: hawk migration studies. Pages 339–346 *in* M. Harwood, ed. Proceedings of Hawk Migration Conference IV. Hawk Migration Association of North America, Washington, CT.

Gauthreaux, S. A., Jr. 1991. The flight behavior of migrating birds in changing wind fields: radar and visual analyses. American Zoologist 31: 187–204.

Gauthreaux, S. A., Jr., J. E. Michi, and C. G. Belser. 2005. The temporal and spatial structure of the atmosphere and its influence on bird migration strategies. Pages 182–193 *in* Greenberg, R. and Marra, P.P. eds. Birds of two worlds: The ecology and evolution of migration. The John Hopkins University Press, Baltimore, MD.

Hall, L. S., and G. C. Richards. 1972. Notes on *Tadarida australis* (Chiroptera: Molossidae). Australian Mammalogy 1:46.

Harmata, A. R., K. M. Podruzny, J. R. Zelenak, and M. L. Morrison. 1999. Using marine surveillance radar to study bird movements and impact assessment. Wildlife Society Bulletin 27: 44–52.

Hassler, S. S., R. R. Graber, and F. C. Bellrose. 1963. Fall migration and weather: a radar study. Wilson Bulletin 75: 56–77.

Horn, J. W., and T. H. Kunz, 2008. Analyzing NEXRAD doppler radar images to assess nightly dispersal patterns and population trends in Brazilian free-tailed bats (Tadarida brasiliensis). Integrative and Comparative Biology 48:24–39.

Huppop, O., J. Dierschke, K, M. Exo, E. Fredrich, and R. Hill. 2006. Bird migration studies and potential collision risk with offshore wind turbines. Ibis 148: 90–109.

Kerlinger, P. 1995. How birds migrate. Stackpole Books, Mechanicsburg, PA. 228 pp.

Kerlinger P. 2000. Avian mortality at communication towers: a review of recent literature, research, and methodology. Unpublished report prepared for U.S. Fish and Wildlife Service, Office of Migratory Bird Management, by Curry & Kerlinger LLC, Cape May Point, NJ. 38 p.

Kerlinger, P. 2003. FAA lighting of wind turbines and bird collisions. Presentation at the NWCC Wildlife Working Group Meeting, 18 November 2003, Washington DC. Available at http://www.nationalwind.org/events/wildlife/20031117/presentations/default.htm

Kerlinger, P., and F. R. Moore. 1989. Atmospheric structure and avian migration. Pages 109–141 *in* D. M. Power ed. Current Ornithology. Vol. 6.

Kerns, J., W. P. Erickson, and E. B. Arnett. 2005. Bat and bird fatality at wind energy facilities in Pennsylvania and West Virginia. Pages 24 – 95 in E. B. Arnett, technical editor, Relationships between bats and wind turbines in Pennsylvania and West Virginia: an assessment of bat fatality search protocols, patterns of fatality, and behavioral interactions with wind turbines. A final report submitted to the Bats and Wind Energy cooperative. Bat Conservation International, Austin, Texas.

Kovach, W. 2003. Oriana version 2.0. Kovach Computing Services, Anglesey, Wales, United Kingdom.

Kunz, T. H., E. B. Arnett, B. A. Cooper, W. P. Erickson, R. P. Larkin, T. J. Mabee, M. L. Morrison, M. D. Strickland, J. M. Szewczak. 2007a. Assessing impacts of wind-energy development on nocturnally active birds and bats: a guidance document. Journal of Wildlife Management 71: 2449–2486.

Kunz, T. H., E. B. Arnett, W. P. Erickson, A. R. Hoar, G. D. Johnson, R. P. Larkin, M. D. Strickland, R. W. Thresher, and M. D. Tuttle. 2007b. Ecological impacts of wind energy development on bats: questions, research needs, and hypotheses. Frontiers in Ecology and the Environment 5: 315–324.

Kunz, T.H., and M.B. Fenton. 2003. Bat ecology. University of Chicago Press, Chicago, IL. 779 pp.

Larkin, R. P. 1991. Flight speeds observed with radar, a correction: slow "birds" are insects. Behavioral Ecology and Sociobiology 29: 221–224.

Larkin, R. P. 2006. Migrating bats interacting with wind turbines: what birds can tell us. Bat Research News 47:23–32.

Larkin, R. P. and R. E. Szafoni. 2008. Evidence for widely dispersed birds migrating together at night. Integrative and Comparative Biology 48: 40–49.

Liechti, F., M. Klaassen, and B. Bruderer. 2000. Predicting migratory flight altitudes by physiological migration models. Auk 117: 205–214.

Longcore, T. L., C. Rich, and S. A. Gauthreaux, Jr. 2005. Scientific basis to establish policy regulating communication towers to protect migratory birds: response to Avatar Environmental, LLC, report regarding migratory bird collisions with communications towers, WT Docket No. 03–187, Federal Communications Commission Notice of Inquiry. Unpublished report prepared for American Bird Conservancy, Defenders of Wildlife, Forest Conservation Council, and The Humane Society of the United States by Land Protection Partners and Clemson University. 33 pp.

Lowery, G. H., Jr. 1951. A quantitative study of the nocturnal migration of birds. University of Kansas Museum of Natural History 3: 361–472.

Mabee, T.J., and B.A. Cooper. 2000. Nocturnal bird migration at the Nine Canyon wind energy project, fall 2000. Unpublished report prepared for Western Ecosystems Technology inc, Cheyene, WY, and Energy Northwest, Richland, WA by ABR, Inc., Forest Grove, OR. 12 pp.

Mabee, T. J., and B. A. Cooper. 2004. Nocturnal bird migration in northeastern Oregon and southeastern Washington. Northwestern Naturalist 85: 39–47.

Mabee, T. J., J. H. Plissner, and B. A. Cooper. 2005a. A radar and visual study of nocturnal bird and bat migration at the proposed Prattsburgh-Italy wind power project, New York, fall 2004. Unpublished report prepared for Ecogen LLC, West Seneca, NY, by ABR, Inc., Forest Grove, OR. 26 pp.

Mabee, T. J., J. H. Plissner, and B. A. Cooper. 2005b. A radar and visual study of nocturnal bird and bat migration at the proposed Prattsburgh-Italy wind power project, New York, spring 2005. Unpublished report prepared for Ecogen LLC, West Seneca, NY, by ABR, Inc., Forest Grove, OR. 29 pp.

Mabee, T.J., J.H. Plissner, and B.A. Cooper. 2005c. A radar and visual study of the nocturnal bird and bat migration at the proposed Flat Rock wind power project, New York, fall 2004. Unpublished report prepared for Ecogen LLC., West Seneca, NY by ABR, Inc., Forest Grove, OR. 29 pp.

Mabee, T. J., J. H. Plissner, B. A. Cooper, and D. P. Young. 2006a. Nocturnal bird migration over an Appalachian Ridge at a proposed wind power project. Wildlife Society Bulletin 34: 682–690.

Mabee, T. J., J. H. Plissner, and B. A. Cooper. 2006b. A radar and visual study of nocturnal bird and bat migration at the proposed Centerville and Wethersfield windparks, New York, spring 2006. Unpublished report prepared for Ecology and Environment, Inc., Lancaster, NY and Noble Environmental Power LLC., Essex, CT, by ABR, Inc., Forest Grove, OR.. 46 pp.

Mabee, T. J., J. H. Plissner, B. A. Cooper, and J. B. Barna. 2006c. A radar and visual study of nocturnal bird and bat migration at the proposed Clinton County Windparks, New York, spring and fall 2005. Unpublished

report prepared for Ecology and Environment, Inc., Lancaster, NY and Noble Environmental Power LLC., Essex, CT, by ABR, Inc., Forest Grove, OR. 44 pp.

Mabee, T.J., J.H. Plissner, J.B. Barna, and B.A. Cooper. 2007. A radar and visual study of nocturnal bird and bat migration at the proposed Centerville and Wethersfield Windparks, New York, fall 2006. Unpublished report prepared for Ecology and Environment, Inc., L:ancaster, NY and Noble Environmental Power LLC., Essex, CT, by ABR, Inc., Forest Grove, OR. 50 pp.

Mabee, T.J. and P.M. Sanzenbacher. 2008. A radar study of nocturnal bird and bat migration at the proposed Hatchet Ridge Wind Project, California, 2007. Unpublished report prepared for Hatchet Ridge Wind, LLC., Portland, OR and Western EcoSystems Technology, Inc., Cheyenne, WY by ABR,

Mabee, T. J., and N. A. Schwab. 2008. A visual and acoustic study of nocturnal bird and bat migration at the proposed Roaring Brook Wind Project, New York, fall 2007. Unpublished report prepared for PPM Energy, Inc., Lowville, NY by ABR, Inc., Forest Grove, OR 47 pp.

Manville A. M. 2000. The ABCs of avoiding bird collisions at communication towers: the next steps. *In* Proceedings of the December 1999 workshop on avian interactions with utility structures, Charleston, SC. Electric Power Research Institute, Palo Alto, CA. Report No. 1000736.

Manville A. M. 2005. Bird strikes and electrocutions at power lines, communication towers, and wind turbines: state of the art and state of the science – next steps toward mitigation. Bird Conservation Implementation in the Americas: Proceedings 3rd International Partners in Flight Conference 2002, C.J. Ralph and T. D. Rich, Editors. U.S.D.A. Forest Service General Technical Report PSW-GTR-191, Pacific Southwest Research Station, Albany, CA: 1051-1064

Nisbet, I. C. T. 1963. Measurements with radar of the height of nocturnal migration over Cape Cod, Massachusetts. Bird-Banding 34: 57–67.

NRC (National Research Council). 2007. Environmental impacts of wind-energy projects. The National Academies Press, Washington, D.C. USA.

NWCC (National Wind Coordinating Committee). 2004. Wind turbine interactions with birds and bats: a summary of research results and remaining questions. fact sheet: second edition. National Wind Coordinating Committee. Washington, D.C. Available at www.nationalwind.org/publications/wildlife/ wildlife_factsheet.pdf (Viewed January 2008).

Osborn R. G., K. F. Higgins, R. E. Usgaard, C. D. Dieter, and R. D. Neiger. 2000. Bird mortality associated with wind turbines at the Buffalo Ridge Wind Resource Area, Minnesota. American Midland Naturalist 143: 41–52.

Page, G. W., L. E. Stenzel, and J. E. Kjelmyr. 1999. Overview of shorebird abundance and distribution in wetlands of the Pacific coast of the contiguous United States. Condor: 101 461–471.

Peurach, S. C. 2003. High-altitude collision between an airplane and a hoary bat, Lasiurus cinereus. Bat Research News 44: 2-3.

Plissner, J.H., T.J. Mabee, and B.A. Cooper. 2005. A radar and visual study of nocturnal bird and bat migration at the proposed Casselman and Martindale Wind Power Projects, Pennsylvania, fall 2004. Unpublished report prepared for Atlantic Renewable Energy Corporation, Dickerson, MD and Curry & Kerlinger, McLean, VA, by ABR, Inc., Forest Grove, OR. 32 pp.

Plissner, J. H., T. J. Mabee, and B. A. Cooper. 2006a. A radar and visual study of nocturnal bird and bat migration at the proposed Highland New Wind Development, Virginia, fall 2005. Unpublished report prepared for Highland New Wind Development, LLC, Harrisonburg, VA, by ABR, Inc., Forest Grove, OR. 33 pp.

Plissner, J. H., T. J. Mabee, and B. A. Cooper. 2006b. A radar and visual study of nocturnal bird and bat migration at the proposed Preston County, West Virginia, and Fayette County, Pennsylvania, Wind Power Projects, spring and fall 2005. Unpublished report prepared for PPM Atlantic Renewable, Washington, DC, by ABR, Inc., Forest Grove, OR. 55 pp.

Plissner, J. H., T. J. Mabee, and B. A. Cooper. 2006c. A radar and visual study of nocturnal bird and bat migration at the proposed Swallow Farm Wind Power Project, Pennsylvania, fall 2005. Unpublished report prepared for St. Francis University, Loretto, PA, by ABR, Inc., Forest Grove, OR. 36 pp.

Plissner, J. H., T. J. Mabee, and B. A. Cooper. 2007. A radar and visual study of nocturnal bird and bat migration at the proposed Somerset County and Bedford County Wind Power Projects, Pennsylvania, spring and fall 2006. Unpublished report prepared for PPM Atlantic Renewable, Washington, DC, by ABR, Inc., Forest Grove, OR. 54 pp.

Reynolds, D. S. 2006. Monitoring the potential impact of a wind development site on bats in the Northeast. Journal of Wildlife Management 70: 1219–1227.

Richardson, W. J. 1978. Timing and amount of bird migration in relation to weather: a review. Oikos 30: 224–272.

Richardson, W. J. 1990. Timing of bird migration in relation to weather: updated review. Pages 79–100 *in* E. Gwinner, ed. Bird migration. Springer–Verlag, Berlin, Germany.

Sanzenbacher, P.M., B.A. Cooper, and T.J. Mabee. 2008. A radar and visual study of nocturnal bird and bat migration at the proposed Bear River Windpark, California, Fall 2006. Unpublished report prepared for Shell Wind Energy Inc., Houston, TX by ABR, Inc., Forest Grove, OR. 42 pp.

Skolnik, M. I. 1980. Introduction to radar systems. McGraw-Hill, New York, NY. 581 pp.

SPSS. 2009. SPSS for Windows, version 18.0. SPSS, Inc., Chicago, IL.

Strickland, D. and G. Johnson. 2006. Talk presented at the National Wind Coordinating Committee Wildlife Research meeting VI, 14–15 November 2006, San Antonio, Texas.

Trapp, J.L. 1998. Bird kills at towers and other human-made structures: an annotated partial bibliography (1960-1998). Unpublished report by U.S. Fish and Wildlife Service, Office of Migratory Bird Management, Arlington, VA. Available at: http://www.fws.gov/migratorybirds/issues/tower.html (Viewed January 2008).

Tucker, V. A. 1996. A mathematical model of bird collisions with wind turbine rotors. ASME Journal of Solar Energy Engineering 118: 253–262.

Tuttle, M. D. 1988. America's neighborhood bats. University of Texas Press, Austin, TX. 96 pp.

USGS (U.S. Geological Survey). 2003. Physiographic regions of the US. Available at http://tapestry.usgs.gov/physiogr/physio.html.

WDFW 2009. Washington Department of Fish and Wildlife Wind Power Guidelines. Olympia, WA. 30pp.

Weir, R. D. 1976. Annotated bibliography of bird kills at man-made obstacles: a review of the state of the art and solutions. Canadian Wildlife Service, Ottawa, ON, Canada. 85 pp.

Whitfield, D. P. and M. Madders. 2006. Deriving collision avoidance rates for red kites Milvus milvus. Natural Research Information Note 3. Natural Research Ltd, Banchory, UK.

Williams, T. C., J. Settel, P. O'Mahoney, and J. M. Williams. 1972. An ornithological radar. American Birds 26: 555–557.

Williams, T. C., J. M. Williams, P. G. Williams, and P. Stokstad. 2001. Bird migration through a mountain pass studied with high resolution radar, ceilometers, and census. Auk 118: 389–403.

Winkelman, J. E. 1995. Bird/wind turbine investigations in Europe. Pages 43–47 and 110–140 *in* LGL Ltd. ed. Proceedings of National Avian–Wind Power Planning Meeting I, Lakewood, CO. Available at http://www.nationalwind.org/pubs/avian94/default.htm

Woodlot (Woodlot Alternatives, Inc.). 2005a. A fall 2004 radar, visual, and acoustic survey of bird and bat migration at the proposed WindFarm Prattsburgh Project in Prattsburgh, New York. Unpublished report prepared for Windfarm Prattsburgh, LLC., Prattsburgh, NY by Woodlot Alternatives, Inc., Topsham, Maine. 45 pp. + appendices.

Woodlot (Woodlot Alternatives, Inc.). 2005b. A fall 2005 radar, visual, and acoustic survey of bird and bat migration at the proposed Howard Wind Project in Howard, New York. Unpublished report prepared for EverPower Global, New York, NY by Woodlot Alternatives, Inc., Topsham, Maine. 79 pp.

Yonker, T.L. and L. Landon. 2005. Nocturnal radar study of bird migration at the proposed Noble Environmental Power, LLC., wind generating project, Bliss, New York. Unpublished report prepared for Noble Enironmental Power LLC., Essex, CT, and for Ecology and Environment, Inc., Lancaster, NY, by Marine Services Diversified, LLC., Youngstown, New York. 57 pp.

Young, Jr., D.P., C.S. Nations, V.K. Poulton, and J. Kerns. 2006. Avian and bat studies for the proposed Dairy Hills wind project, Wyoming County, New York, Final report, April – October 2005. Unpublished report prepared for Horizon Wind Energy, Albany, NY, by Western EcoSystems Technology Inc., Cheyenne, WY. 44 pp.

Zalles, J. I., and K. L. Bildstein, eds. 2000. Raptor Watch: a global directory of raptor migration sites. Birdlife International, Cambridge, United Kingdom, and Hawk Mountain Sanctuary, Kempton, PA. Birdlife Conservation Series No. 9.

Zar, J. H. 1999. Biostatistical analysis. 3rd ed. Prentice-Hall, Inc., Englewood Cliffs, NJ. 663 pp.

Appendix 1. Full model set from analyses employing Akaike's Information Criterion (AIC) to investigate the influence of environmental factors on passage rates of radar targets at the proposed Coyote Crest Wind Power Project, Washington, spring 2008. The full model set examining flight altitudes was the same with the exception that models with the variable for favorable migration were excluded.

Model
Global: wind direction + wind direction*wind speed + favorable migration(d) + ceiling height + lunar illumination*cloud cover + synoptic + date
Wind direction
Wind direction + favorable migration(d)
Wind direction + ceiling height
Wind direction + lunar illumination*cloud cover
Wind direction + date
Wind direction*wind speed + favorable migration(d) + date
Wind direction*wind speed + ceiling height + date
Wind direction*wind speed + lunar illumination*cloud cover + date
Wind direction*wind speed + favorable migration(d) + ceiling height
Wind direction*wind speed + favorable migration(d) + ceiling height + date
Wind direction*wind speed + favorable migration(d) + ceiling height + lunar illumination*cloud cover
Wind direction*wind speed + favorable migration(d) + ceiling height + lunar illumination*cloud cover + date
Wind direction*wind speed
Wind direction*wind speed + favorable migration(d)
Wind direction*wind speed + ceiling height
Wind direction*wind speed + lunar illumination*cloud cover
Wind direction*wind speed + date
Favorable migration(d)
Favorable migration(d) + ceiling height
Favorable migration(d) + lunar illumination*cloud cover
Favorable migration(d) + date
Ceiling height
Ceiling height + lunar illumination*cloud cover
Ceiling height + date
Ceiling height + lunar illumination*cloud cover + date
Lunar illumination*cloud cover
Lunar illumination*cloud cover + date

Appendix 2. Mean (± SE) passage rates, altitude specific passage rates (<125 m agl), and flight altitudes of nocturnal radar targets observed at the 1.5-km range during half-month periods of fall migration and over the full sampling season at the proposed Coyote Crest Wind Power Project, Washington, fall 2008.

Metric	August 15–30	September 1–15	September 16–30	October 1–15	Total
Passage rate (targets/km/h)	155 ± 36	239 ± 17	233 ± 44	158 ± 36	196 ± 18
<125 m agl passage rate (targets/km/h)	22 ± 7	29 ± 4	42 ± 13	16 ± 5	27 ± 4
Flight altitude (m agl)	339 ± 5	466 ± 5	431 ± 6	518 ± 6	454 ± 3
Number nights sampled	15	15	14	15	59

Appendix 3. Nocturnal flight altitudes of radar targets (% of all targets) detected at the 1.5-km range at the proposed Coyote Crest Wind Power Project, Washington, fall 2008, by 25 m agl flight altitude category.

Flight altitude (m)	Cumulative % of radar targets (n = 10,982 targets)
1–25	0.5
1–50	1.9
1–75	4.2
1–100	6.9
1–125	10.0
1–150	13.4
1–175	17.2
1–200	20.8
1–225	24.9
1–250	28.8
1–1,500	100.0

Appendix 4. Linear mixed models with weights (w_i) >0 explaining the influence of environmental factors on passage rates (surveillance radar, n = 328 sampling sessions) and flight altitudes (vertical radar, n = 314 sampling sessions) of radar targets at the proposed Coyote Crest Wind Power Project, Washington, fall 2008. Model weights (w_i) were based on Akaike's Information Criterion (AIC).

Analysis/Model	-2 Log Likelihood[a]	K[b]	AIC_c[c]	ΔAIC_c[d]	w_i[e]
Passage rates					
Wind direction + ceiling height	1,737.00	14	1,766.34	0.00	0.33
Ceiling height	1,747.13	10	1,767.82	1.48	0.16
Favorable migration(d) + ceiling height	1,746.02	11	1,768.86	2.52	0.09
Lunar illumination*cloud cover	1,746.17	11	1,769.01	2.67	0.09
Wind direction + lunar illumination*cloud cover	1,737.53	15	1,769.07	2.73	0.08
Ceiling height + lunar illumination*cloud cover	1,742.31	13	1,769.47	3.13	0.07
Favorable migration(d) + lunar illumination*cloud cover	1,745.22	12	1,770.21	3.87	0.05
Ceiling height + date	1,745.95	12	1,770.94	4.60	0.03
Synoptic	1,750.96	10	1,771.66	5.32	0.02
Lunar illumination*cloud cover + date	1,744.87	13	1,772.03	5.69	0.02
Wind direction*wind speed + ceiling height	1,731.89	19	1,772.36	6.02	0.02
Ceiling height + lunar illumination*cloud cover + date	1,740.92	15	1,772.46	6.12	0.02
Global: wind direction + wind direction*wind speed + favorable migration(d) + ceiling height + lunar illumination*cloud cover + synoptic + date	1,714.98	27	1,774.02	7.68	0.01
Synoptic + date	1,749.40	12	1,774.39	8.06	0.01
Wind direction*wind speed + lunar illumination*cloud cover	1,731.68	20	1,774.42	8.08	0.01
Wind direction*wind speed + favorable migration(d) + ceiling height	1,731.89	20	1,774.63	8.29	0.01
Flight altitudes					
Lunar illumination*cloud cover + date	1,474.21	12	1,499.25	0.00	0.44
Wind direction + date	1,473.38	13	1,500.59	1.35	0.23
Synoptic + date	1,478.61	11	1,501.48	2.24	0.14
Ceiling height + lunar illumination*cloud cover + date	1,473.38	14	1,502.79	3.54	0.08
Wind direction*wind speed + lunar illumination*cloud cover + date	1,458.86	21	1,504.02	4.77	0.04
Global: wind direction + wind direction*wind speed + ceiling height + lunar illumination*cloud cover + synoptic + date	1,450.55	25	1,505.06	5.82	0.02
Date	1,487.58	9	1,506.17	6.92	0.01
Wind direction*wind speed + date	1,468.19	18	1,506.51	7.26	0.01
Ceiling height + date	1,485.00	11	1,507.88	8.63	0.01

[a] Calculated with the Maximum Likelihood method.
[b] Number of estimable parameters in approximating model (see methods for explanation).
[c] Akaike's Information Criterion corrected for small sample size.
[d] Difference in value between AIC_c of the current model versus the best approximating model with the minimal AIC_c value.
[e] Akaike weight—probability that the current model (i) is the best approximating model among those being considered.

Appendix 5. Calculation of turbine passage rate indices (estimated number of targets passing within the area occupied by each proposed turbine) during nocturnal periods of fall 2008, at the proposed Coyote Crest Wind Power Project, Washington, fall 2008.

Calculation parameter	Coyote Crest radar site
WIND-TURBINE CHARACTERISTICS	
(A) Total turbine height (m)	127.5
(B) Blade radius[a] (m)	47.5
(C) Height below blade (m)	32.5
(D) Approximate front-to-back width (m)	6
(E) Minimal (side profile) area (m^2) = A × D	765
(F) Maximal (front profile) area (m^2) = (C × D) + (π × B^2)	7,283.2
PASSAGE RATE	
(G) Mean rate below 125 m agl (targets/km/h)	27.21
(H) Area sampled below 125 m agl = 125 x 1,000 (m^2)	125,000
(I) Mean passage rate per unit area (targets/m^2/h) = G/H	0.0002176
TURBINE PASSAGE RATE INDEX	
(J) Duration of study period (# nights)	60
(K) Mean number of hours of darkness (h/night)	10
(L) Minimum number of targets/km/h in zone of risk = E x I	0.166496
(M) Maximum number of targets/km/h in zone of risk = F x I	1.585141
(N) Minimum number of targets in zone/d = K x L	1.66
(O) Maximum number of targets in zone/d =K x M	15.85
(P) Minimum number of targets in zone of risk during 60-night study period = J x K x L	100
(Q) Maximum number of targets in zone of risk during 60-night study period = J x K x M	951

Appendix 6. Results of fall migration studies conducted at proposed (pre-construction) U.S. wind power development areas, using X-band mobile radar systems. Current project is in boldface type. See Appendix 10 for a list of citations.

Project	Study period	Nights	Passage rate ± SE (targets/km/h)	Methods [a]	Flight altitude ± SE (m agl)	% Targets ≤125 m agl	Passage rate ± SE ≤125 m agl (targets/km/h)	Methods [a]
Eastern US								
Bliss, NY	9/09 – 10/31/05	8	444	3	411	13	Na	3
Centerville, NY	8/16 – 10/14/06	57	259 ± 27	1	350 ± 2	12	38 ± 6	1
Chautauqua, NY	9/02 – 9/25/03 10/05 – 10/10/03	29	238 ± 48	2	532 ± 3	4	Na	2
Clinton County, NY	8/15 – 10/13/05	57	197 ± 31	1	333 ± 1	12	28 ± 2	1
Copenhagen, NY	9/02 – 10/09/94	29	371 ± 85	2	Na	Na	Na	3
Dairy Hills, NY	8/15 – 10/15/05	57	64 ± 3	2	466 ± 2	10	Na	2
Harrisburg, NY	9/02 – 10/01/98	13	135 ± 42	2	Na	Na	Na	3
Howard, NY	9/01 – 10/15/98	39	481 ± 52	2	491 ± 14	2% < 91m	Na	2
Maple Ridge, NY	8/05 – 10/03/06	57	158 ± 21	1	415 ± 2	8	11 ± 1	1
Martinsburg, NY	9/02 – 10/09/94	6	661 ± 353	2	Na	Na	Na	3
Prattsburgh, NY	8/26 – 11/03/04	30	193 ± 21	2	516 ± 17	3	Na	2
Prattsburgh–Italy, NY	8/15 – 9/30/04	41	200 ± 12	1	365 ± 3	9	20 ± 4	1
Wethersfield, NY	9/02 – 10/01/98	19	175 ± 42	2	Na	Na	Na	3
Wethersfield Windparks, NY	8/16 – 10/14/06	56	256 ± 20	1	344 ± 1	11	36 ± 5	1
Bedford County, PA	8/16 – 10/14/06 [b]	29	438 ± 67	1	379 ± 3	10	47 ± 10	1
Casselman, PA	8/15 – 10/15/04 [b]	30	174 ± 31	1	436 ± 3	7	16 ± 4	1
Fayette County, PA	8/15 – 10/13/05 [b]	26	297 ± 61	1	426 ± 3	5	27 ± 9	1
Somerset County, PA	8/16 – 10/14/06 [b]	29	316 ± 60	1	374 ± 3	8	27 ± 5	1
Swallow Farm, PA	8/16 – 10/14/05	58	166 ± 17	1	402 ± 2	5	10 ± 2	1
Mt. Storm, WV	9/03 – 10/17/03	40	241 ± 33	1	410 ± 2	13	Na	1
Preston County, WV	8/15 – 10/13/05 [b]	26	379 ± 91	1	420 ± 4	10	47 ± 12	1
Highland New Wind, VA	8/16 – 10/14/05	58	385 ± 55	1	442 ± 3	12	Na	1

Appendix 6. Continued.

Project	Study period	Nights	Passage rate ± SE (targets/km/h)	Methods [a]	Flight altitude ± SE (m agl)	% Targets ≤125 m agl	Passage rate ± SE ≤125 m agl (targets/km/h)	Methods [a]
Western US								
Coyote Crest, WA	8/15 –10/14/08	61	196 ± 18	1	454 ± 3	10	27 ± 4	1
Nine Canyon, WA	9/04 – 10/09/00	10	31 ± 5	3	Na	Na	Na	Na
Stateline, WA	8/24 – 10/17/00	29	21 ± 2	2	Na	Na	Na	Na
Stateline, WA	9/04 – 10/17/01	23	22 ± 3	2	647 ± 7	3	Na	2
Vansycle, OR	8/24 – 10/17/00	29	19 ± 2	2	Na	Na	Na	Na
Vansycle, OR	9/04 – 10/17/01	30	26 ± 3	2	606 ± 8	9	Na	2
Cotterel Mt., ID	8/31 – 10/14/03	29	32 ± 9	2	565 ± 6	3	Na	2
Bear River, CA	8/16 – 10/14/06	60	269 ± 11	1	329 ± 2	11	35 ± 3	1
Hatchet Ridge, CA	9/07 – 10/15/07	36	290 ± 26	1	468 ± 3	8	28 ± 4	1

[a] 1 = equipment and methods similar to current study (comparable), 2 = differences in radar settings, method of data collection, or data analysis (unknown comparability), 3 = major differences in equipment or methods (not comparable). Overall comparability of studies must also consider study period and duration.

[b] alternate night sampling

Appendix 7. Results of nocturnal surveys (using Generation-3 night-vision goggles and spotlights with infrared filters) conducted by ABR, Inc., at proposed (pre-construction) wind power development areas during fall in the U.S. This study is in boldface type. See Appendix 10 for a list of citations.

		Sampling effort			Birds (%)				Bats (%)				
Project	Study period	Nights	Hours	Min\h [a]	Passerines	Non-passerines	Other	Total	Small	Large	Other	Total	Total number birds & bats
Fall													
Eastern US													
Centerville, NY	8/16 – 10/14/06	43	205.8	2	77.0	2.6	6.5	86.2	6.5	6.3	0.9	13.8	948
Clinton County, NY	8/15 – 10/13/05	53	242.7	2	75.2	3.4	3.2	81.8	11.3	5.7	1.2	18.2	829
Maple Ridge, NY [c]	8/05 – 10/3/04	50	195.9	2 [d]	77.5	8.8	2.2	88.5	9.9	1.3	0.3	11.5	1,562
Roaring Brook, NY	7/22 –10/15/07	83	354.7	2	69.7	1.0	9.2	79.9	8.1	9.4	2.7	20.1	1,015
Wethersfield Windparks, NY	8/16 – 10/14/06	56	235.8	2	70.5	2.5	16.7	89.7	6.6	2.2	1.4	10.3	845
Bedford County, PA	8/16 – 10/14/06 [b]	26	107.0	2	55.0	0.2	34.2	89.4	7.1	2.3	1.3	10.6	1,105
Casselman, PA	8/15 – 10/15/04 [b]	29	79.8	3 [d]	59.1	1.3	9.9	70.3	4.0	1.0	24.8	29.7	1,187
Fayette County, PA	8/15 – 10/13/05 [b]	29	88.2	3	74.0	1.9	9.0	84.8	4.8	4.8	5.6	15.2	1,866
Somerset County, PA	8/16 – 10/14/06 [b]	28	110.2	2	31.0	3.2	26.8	61.0	24.4	9.9	4.7	39.0	533
Swallow Farm, PA	8/16 – 10/14/05	43	154.6	3	89.2	1.1	0.8	91.1	2.8	2.7	3.3	8.9	1,062
Preston County, WV	8/15 – 10/13/05 [b]	22	65.5	3	74.1	0.5	8.9	83.7	5.5	5.0	5.8	16.3	961
Highland New Wind, VA	8/16 – 10/14/05	49	159.4	3	79.1	1.4	5.8	87.1	4.2	1.4	7.3	12.9	1,541
Western US													
Coyote Crest, WA	**8/15 –10/14/08**	**61**	**154.4**	**2**	**55.0**	**26.8**	**7.0**	**88.7**	**5.2**	**2.7**	**3.4**	**11.3**	**444**
Bear River, CA	8/16 – 10/14/06	52	149.7	2	23.9	32.3	27.1	83.2	10.3	6.5	0.0	16.8	155

[a] 1 = 5 min/h, 2 = 40–50 min/h, 3 = 40–50 min/h until ~1 Oct, then 5 min/h until end of study.
[b] alternate night sampling.
[c] formerly known as Flat Rock.
[d] spotlight with red lens.

Appendix 8. Seasonal mean rates (numbers/h ± 1 SE) of birds and bats flying below ~ 150 m agl observed with night-vision goggles and infrared spotlights during nocturnal hours of spring and fall migration. N equals number of nights sampled per season. See Appendix 10 for a list of citations.

		Sampling effort			Birds (number/h)		Bats (number/h)		Total number
Project	Sampling dates	Nights (n)	Hours	Min\h [a]	Mean	SE	Mean	SE	birds & bats
Fall									
Eastern US									
Centerville, NY	8/16 – 10/14/06	43	205.8	2	5.0	1.1	0.7	0.1	948
Clinton County, NY	8/15 – 10/13/05	53	242.7	2	2.9	0.4	0.6	0.1	829
Maple Ridge, NY [c]	8/5 – 10/3/04	50	195.9	2 [d]	5.9	0.8	0.9	0.1	1,562
Roaring Brook, NY	7/22 – 10/15/07	83	354.7	2	2.0	0.7	0.6	0.1	1,015
Wethersfield, NY	8/16 – 10/14/06	56	235.8	2	3.5	0.5	0.4	0.1	845
Bedford County, PA	8/16 – 10/14/06 [b]	29	107.0	2	8.6	2.7	1.4	0.2	1,105
Casselman, PA	8/15 – 10/15/04 [b]	29	79.8	3 [d]	9.5	2.2	3.2	0.9	1,187
Fayette County, PA	8/15 – 10/13/05 [b]	29	88.2	3	16.5	6.4	2.5	0.7	1,866
Somerset County, PA	08/16 – 10/14/06 [b]	29	110.2	2	3.2	0.7	2.2	0.5	533
Swallow Farm, PA	8/16 – 10/14/05	43	154.6	3	5.6	1.0	0.6	0.1	1,062
Preston County, WV	8/15 – 10/13/05 [b]	22	65.5	3	15.5	5.1	1.9	0.5	961
Highland New Wind, VA	8/16 – 10/14/05	49	159.4	3	8.2	2.0	1.4	0.2	1,541
Western US									
Coyote Crest, WA	**8/15 –10/14/08**	**61**	**154.4**	**2**	**2.2**	**0.5**	**0.5**	**0.2**	**479**
Bear River, CA	8/16 – 10/14/06	52	149.7	2	0.9	0.3	0.2	0.0	155

[a] 1 = 5 min/h, 2 = 40–50 min/h, 3 = 40–50 min/h until ~1 Oct, then 5 min/h until end of study

[b] alternate night sampling

[c] formerly known as Flat Rock

[d] spotlight with red lens

Appendix 9. Fall turbine passage rate indices (number of birds and bats passing within the area occupied by each turbine each night) at proposed (pre-construction) U.S. wind power development areas, based on studies using X-band mobile radar systems. Current project is in boldface type. See Appendix 10 for a list of citations.

Project	Study period	Nights sampled	Individuals/turbine/day	
			Minimum (side profile)	Maximum (front profile)
Fall				
Eastern US				
Centerville, NY	8/16 – 10/14/06	57	2	16
Clinton County, NY	8/15 – 10/13/05	57	2	11
Maple Ridge, NY	8/05 – 10/03/06	57	1	5
Prattsburgh–Italy, NY	8/15 – 9/30/04	41	1	8
Wethersfield Windparks, NY	8/16 – 10/14/06	56	2	14
Bedford County, PA	8/16 – 10/14/06 [a]	29	3	23
Casselman, PA	8/15 – 10/15/04 [a]	30	1	7
Fayette County, PA	8/15 – 10/13/05 [a]	26	1	7
Somerset County, PA	8/16 – 10/14/06 [a]	29	2	13
Swallow Farm, PA	8/16 – 10/14/05	58	1	4
Preston County, WV	8/15 – 10/13/05 [a]	26	4	29
Highland New Wind, VA	8/16 – 10/14/05	58	3	25
Western US				
Coyote Crest, WA	**8/15 –10/14/08**	**61**	**2**	**16**
Bear River, CA	8/16 – 10/14/06	60	2	17
Hatchet Ridge, CA	9/07 – 10/15/07	36	2	16

[a] Alternate night sampling.

Appendix 10. Citations for wind power projects listed in Appendices 6, 7, 8, and 9.

Season/project/state	Citation
Fall	
Bliss, NY	Yonker and Landon 2005
Centerville, NY	Mabee et al. 2007
Chautauqua, NY	Cooper et al. 2004b
Clinton County, NY	Mabee et al. 2006c
Copenhagen, NY	Cooper et al. 1995a
Dairy Hills, NY	Young et al. 2006
Harrisburg, NY	Cooper & Mabee 2000
Howard, NY	Woodlot 2005b
Maple Ridge, NY	Mabee et al. 2005c
Martinsburg, NY	Cooper et al. 1995a
Prattsburgh, NY	Woodlot 2005a
Prattsburgh–Italy, NY	Mabee et al. 2005a
Roaring Brook, NY	Mabee et al. 2008
Wethersfield, NY	Cooper & Mabee 2000
Wethersfield Windparks, NY	Mabee et al. 2007
Bedford County, PA	Plissner et al. 2007
Casselman, PA	Plissner et al. 2005
Fayette County, PA	Plissner et al. 2006b
Somerset County, PA	Plissner et al. 2007
Swallow Farm, PA	Plissner et al. 2006c
Mt. Storm, WV	Mabee et al. 2006a

Appendix 10. Continued.

Season/project/state	Citation
Preston County, WV	Plissner et al. 2006b
Highland New Wind, VA	Plissner et al. 2006a
Nine Canyon, WA	Mabee & Cooper 2000
Stateline, WA	Mabee & Cooper 2004
Vansycle, OR	Mabee & Cooper 2004
Cotterel Mt., ID	Cooper et al. 2004a
Bear River, CA	Sanzenbacher et al. 2008
Hatchet Ridge, CA	Mabee and Sanzenbacher 2008